AO 026

S-DIAS Analog Output Module

Instruction Manual

Date of creation: 16.12.2016 | Version date: 26.07.2023 | Article number: 20-010-026-E

Publisher: SIGMATEK GmbH & Co KG
A-5112 Lamprechtshausen
Tel.: +43/6274/4321
Fax: +43/6274/4321-18
Email: office@sigmatek.at
WWW.SIGMATEK-AUTOMATION.COM

Translation of the Original Instructions

S-DIAS Analog Output Module AO 026

with 2 outputs (voltage/current switchable)

The S-DIAS AO 026 analog output module has two galvanically isolated outputs with a resolution of 16 bits, which can be switched between voltage and current outputs. The analog outputs are powered by an external +24 V supply.

Contents

1 Introduction

1.1 Target Group/Purpose of this Operating Manual

This operating manual contains all information required for the operation of the product.

This operating manual is intended for:

- Project planners
- Technicians
- Commissioning engineers
- Machine operators
- Maintenance/test technicians

General knowledge of automation technology is required.

Further help and training information, as well as the appropriate accessories can be found on our website www.sigmatek-automation.com.

Our support team is happily available to answer your questions.
Please see our website for our hotline number and business hours.

1.2 Important Reference Documentation

This and additional documents can be downloaded from our website or obtained through support.

1.3 Contents of Delivery

1x AO 026

2 Basic Safety Directives

2.1 Symbols Used

The following symbols are used in the operator documentation for warning and danger messages, as well as informational notes:

DANGER

Danger indicates that death or serious injury **will occur**, if the specified measures are not taken.

⇨ To avoid death or serious injuries, observe all guidelines.

Danger indique une situation dangereuse qui, faute de prendre les mesures adéquates, **entraînera** des blessures graves, voire mortelles.

⇨ Respectez toutes les consignes pour éviter des blessures graves, voire mortelles.

WARNING

Warning indicates that death or serious injury **can** occur, if the specified measures are not taken.

⇨ To avoid death or serious injuries, observe all guidelines.

Avertissement d'une situation dangereuse qui, faute de prendre les mesures adéquates, **entraînera** des blessures graves, voire mortelles.

⇨ Respectez toutes les consignes pour éviter des blessures graves, voire mortelles.

CAUTION

Caution indicates that moderate to slight injury **can** occur, if the specified measures are not taken.

⇨ To avoid moderate to slight injuries, observe all guidelines.

Attention indique une situation dangereuse qui, faute de prendre les mesures adéquates, **peut** entraîner des blessures assez graves ou légères.

⇨ Respectez toutes les consignes pour éviter des blessures graves, voire mortelles.

INFORMATION

Information

⇨ Provides important information on the product, handling or relevant sections of the documentation, which require attention.

2.2 Disclaimer

INFORMATION

The contents of this operating manual were prepared with the greatest care. However, deviations cannot be ruled out. This operating manual is regularly checked and required corrections are included in the subsequent versions. The machine manufacturer is responsible for the proper assembly, as well as device configuration. The machine operator is responsible for safe handling, as well as proper operation.

The current operating manual can be found on our website. If necessary, contact our support.

Subject to technical changes, which improve the performance of the devices. The following operating manual is purely a product description. It does not guarantee properties under the warranty.

Please thoroughly read the corresponding documents and this operating manual before handling a product.

SIGMATEK GmbH & Co KG is not liable for damages caused through, non-compliance with these instructions or applicable regulations.

2.3 General Safety Directives

The Safety Directives in the other sections of this operating manual must be observed. These instructions are visually emphasized by symbols.

INFORMATION

According to EU Directives, the operating manual is a component of a product.

This operating manual must therefore be accessible in the vicinity of the machine since it contains important instructions.

This operating manual should be included in the sale, rental or transfer of the product, or its online availability indicated.

Regarding the requirements for Safety and health connected to the use of machines, the manufacturer must perform a risk assessment in accordance with machine directives 2006/42/EG before introducing a machine to the market.

Operate the unit with devices and accessories approved by SIGMATEK only.

CAUTION

Handle the device with care and do not drop or let fall.

Prevent foreign bodies and fluids from entering the device.

The device must not be opened!

Manipulez l’appareil avec précaution et ne le laissez pas tomber.

Empêchez les corps étrangers et les liquides de pénétrer dans l’appareil.

L’appareil ne doit pas être ouvert!

If the device does not function as intended or has damage that could pose a danger, it must be replaced!

En cas de fonctionnement non conforme ou de dommages pouvant entraîner des risques, l'appareil doit être remplacé!

The module complies with EN 61131-2.

In combination with a facility, the system integrator must comply with EN 60204-1 standards.

For your own safety and that of others, compliance with the environmental conditions is essential.

Le module est conforme à la norme EN 61131-2.

En combinaison avec une équipement, l’intégrateur de système doit respecter la norme EN 60204-1.

Pour votre propre sécurité et celle des autres, le respect des conditions environnementales est essential.

2.4 Software/Training

The application is created with the software LASAL CLASS 2 and LASAL SCREEN Editor.

Training for the LASAL development environment, with which the product can be configured, is provided. Information on our training schedule can be found on our website.

3 Standards and Directives

3.1 Directives

The product was constructed in compliance with the following European Union directives and tested for conformity.

3.1.1 EU Conformity Declaration

EU Declaration of Conformity

The product AO 026 conforms to the following European directives:

- **2014/35/EU** Low-voltage Directive
- **2014/30/EU** Electromagnetic Compatibility (EMC Directive)
- **2011/65/EU** “Restricted use of certain hazardous substances in electrical and electronic equipment” (RoHS Directive)

The EU Conformity Declarations are provided on the SIGMATEK website. See Products/Downloads or use the search function and the keyword “EU Declaration of Conformity”.

4 Type Plate

HW: X.XX
SW: XX.XX.XXX
Safety Version: SXX.XX.XX

Serial No.

SIGMATEK GMBH & CO KG
Sigmatekstrasse 1 A-5112 LAMPRECHTSHAUSEN

Article Number Product Name Short Name

Exemplary nameplate (symbol image)

HW: 1.00
SW: 01.00.000
Safety Version: S01.00.00

12345678

SIGMATEK GMBH & CO KG
Sigmatekstrasse 1 A-5112 LAMPRECHTSHAUSEN

12-246-133-3 Handbediengerät Wireless HGW 1033-3

HW: Hardware version
SW: Software version

5 Technical Data

5.1 Analog Output Voltage Specifications

Number of channels	2	
Output range	-10 … +10 V	0 ... +10 V
Output value	-30,000 ... +30,000	0 ... +60,000
Output voltage over range	-10.8 … +10.8 V	0 … +10.8 V
Output value over range	-32,400 ... +32,400	0 … +64,800
Resolution	16-bit (ca. 0.3 mV/LSB)	16-bit (ca. 0.15 mV/LSB)
Refresh time of all channels	≥ 250 µs (depending on the cyclic time)	
Output voltage capacity	maximum 2 mA	
Allowable capacitive load	maximum 100 nF	
Short circuit protection	yes	
Settling time	200 µs typical for C < 100 nF (99.9 % of the end value)	
Galvanic isolation	yes (500 V) (1)	
Output precision	±0.04 % of maximum output value	

5.2 Analog Output Current Specifications

Number of channels	2	
Output range	0-20 mA	4-20 mA
Output value	0-60,000	12,000-60,000
Output range over range	0-20.2 mA	3.8-20.2 mA
Output value over range	0-60,600	11,400-60,600
Resolution current	16-bit (ca. 0.3 µA/LSB)	
Refresh time of all channels	≥ 250 µs (depending on the cyclic time)	
Settling time	200 µs typically for L < 0.5 mH at 50 Ω 200 µs typically for L < 5 mH at 500 Ω	
Load	maximum 500 Ω	
Allowed output inductivity	maximum 0.5 mH at 50 Ω maximum 5 mH at 500 Ω	
Cable break monitor	yes	
Galvanic isolation	yes (500 V) [1]	
Output precision	±0.17 % of maximum output value	

[1] The galvanic isolation exists between S-DIAS bus and analog output and between the analog outputs

5.3 Electrical Requirements

External +24 V supply	+18-30 V DC	
Current consumption of the +24 V supply without load on the analog outputs	typically 45 mA	maximum 55 mA
Current consumption of the +24 V supply with load on the analog outputs	typically 82 mA	maximum 95 mA
Voltage supply from S-DIAS bus	+5 V	
Current consumption on the S-DIAS bus (+5 V supply)	typically 60 mA	maximum 65 mA
Voltage supply from S-DIAS bus	+24 V	
Current consumption on the S-DIAS bus (+24 V supply)	-	-

INFORMATION

If this S-DIAS module is connected to an S-DIAS supply module with several S-DIAS modules, the total current of the modules used must be determined and checked.

The total current of the +24 V supply cannot exceed 1.6 A!

The total current of the +5 V supply cannot exceed 1.6 A!

The specification for the current can be found in the module-specific documentation under "Electrical Requirements".

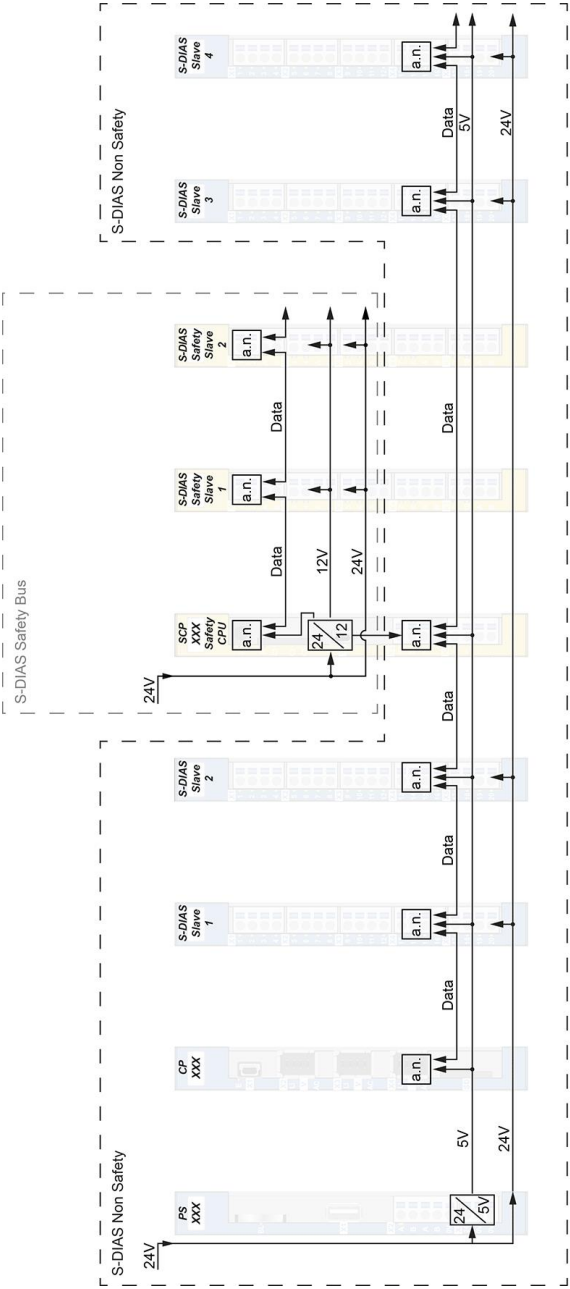
S-DIAS Non Safety
S-DIAS Slave 4
S-DIAS Slave 3
S-DIAS Safety Bus
S-DIAS Safety Slave 2
S-DIAS Safety Slave 1
SCP XXX Safety CPU
24V
12V
24V
24/12
Data
a.n.
S-DIAS Non Safety
S-DIAS Slave 2
S-DIAS Slave 1
CP XXX
PS XXX
24V
24/5V
5V
24V
Data
a.n. = active node
Wiring S-DIAS Safety in S-DIAS System
- each S-DIAS module is an active module (active node)
- Safety CPU is connected to the S-DIAS bus (incl. +5 V supply)
- Safety bus is independent and separated from the S-DIAS bus

5.4 Miscellaneous

Article number	20-010-026
Standard	UL (in preparation), UKCA

5.5 Environmental Conditions

Storage temperature	-20 ... +85 °C	
Ambient temperature	0 ... +55 °C	
Humidity	0-95 %, non-condensing	
Installation altitude above sea level	0-2000 m without derating > 2000 m with derating of the maximum environmental temperature by 0.5 °C per 100 m	
Operating conditions	pollution degree 2	
EMC resistance	in accordance with EN 61000-6-2:2007 (industrial area)	
EMC noise generation	in accordance with EN 61000-6-4 (industrial area)	
Vibration resistance	EN 60068-2-6	3.5 mm from 5-8.4 Hz 1 g from 8.4-150 Hz
Shock resistance	EN 60068-2-27	15 g
Protection type	EN 60529	IP20

6 Mechanical Dimensions

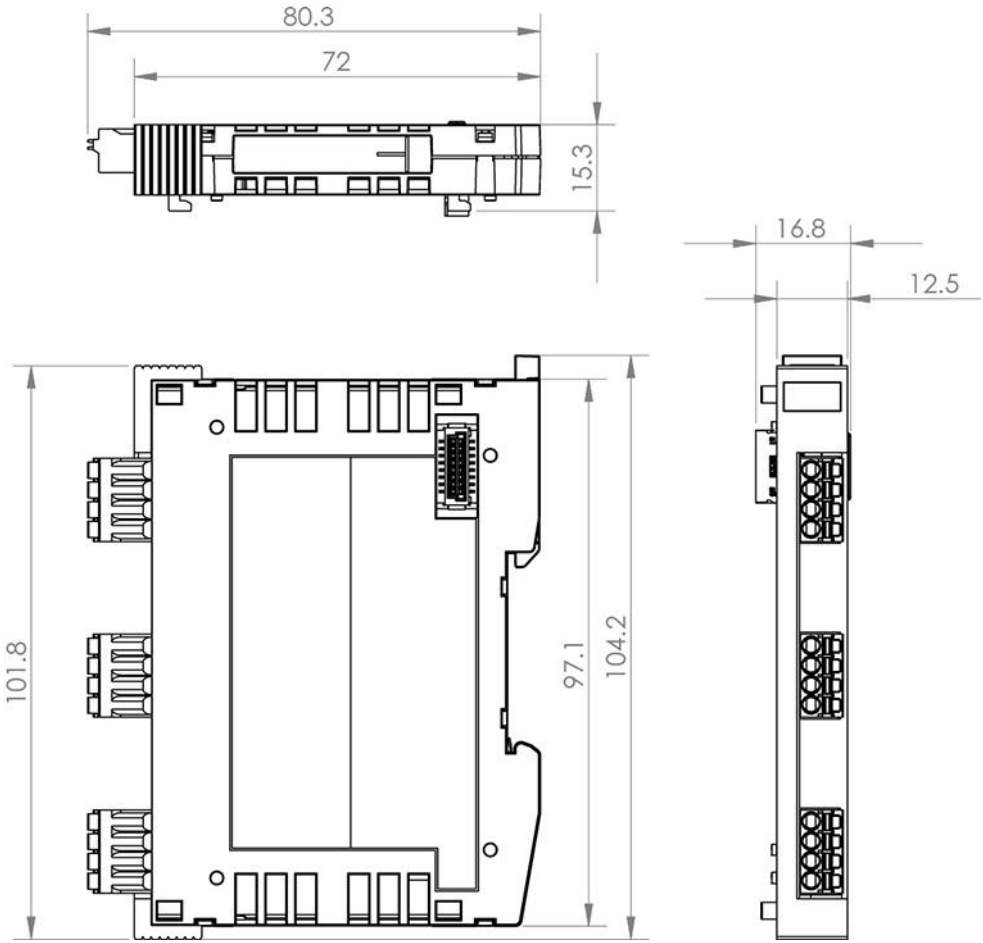

7 Connector Layout

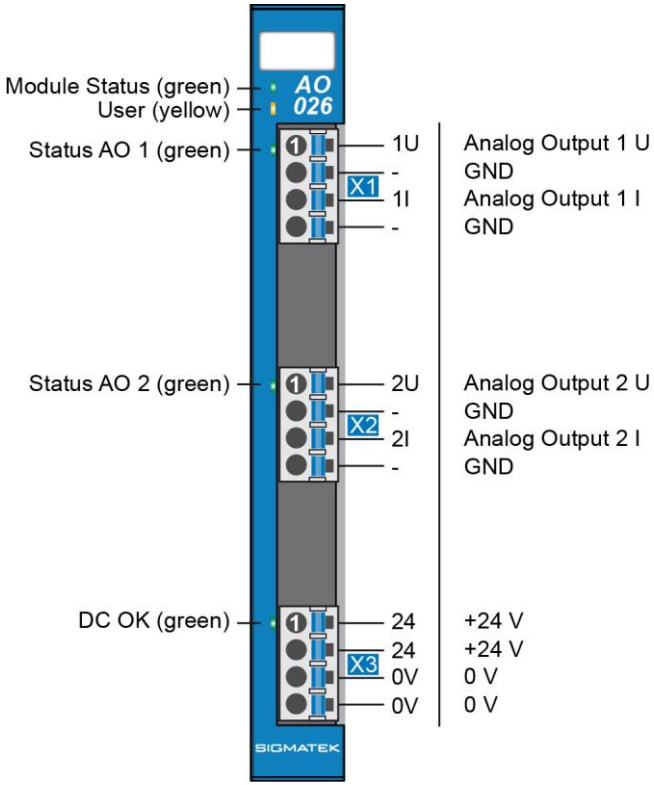

INFORMATION

The connections of the +24 V supply (X3: pin 1 and pin 2) or the GND supply (X3: pin 3 and pin 4) are internally bridged. To supply the module, only one connection to a +24 V pin (pin 1 or pin 2) and a GND pin (pin 3 or pin 4) is required. The bridged connections may be used for further looping of the +24 V supply and the GND supply. However, it must be taken into account that a total current of 6 A per connection is not exceeded by the forward looping!

7.1 Status LEDs

Module Status	green	ON	module active
		OFF	no supply available
		BLINKING (5 Hz)	no communication
User	yellow	ON	can be set from the application (e.g. the module LED can be set to blinking through the visualization so that the module is easily found in the control cabinet)
		OFF	
		BLINKING (2 Hz)	
		BLINKING (4 Hz)	
Status AO1, AO2	green	ON	voltage supply for analog outputs OK
		OFF	no voltage supply for analog outputs available
DC OK	green	ON	external voltage supply OK
		OFF	no external voltage supply available

7.2 Applicable Connectors

Connectors:
X1, X2: Connectors with spring terminals (included in delivery)
The spring terminals are suitable connecting ultrasonically compacted (ultrasonically welded) strands.

Connections:

Stripping length/Sleeve length:	10 mm
Mating direction:	parallel to the conductor axis or circuit board
Conductor cross section rigid:	0.2-1.5 mm^2
Conductor cross section flexible:	0.2-1.5 mm^2
Conductor cross section ultrasonically compacted:	0.2-1.5 mm^2
Conductor cross section AWG/kcmil:	24-16
Conductor cross section flexible with ferrule without plastic sleeve:	0.25-1.5 mm^2
Conductor cross section flexible with ferrule with plastic sleeve:	0.25-0.75 mm^2 (reason for reduction d2 of the ferrule)

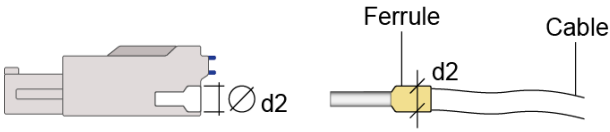

d2 = max. 2.8 mm

7.3 Label Field

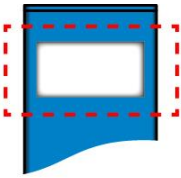

Manufacturer	Weidmüller
Type	MF 10/5 CABUR MC NE WS
Weidmüller article number	1854510000
Compatible printer	Weidmüller
Type	Printjet Advanced 230V
Weidmüller article number	1324380000

8 Wiring

8.1 Wiring Example

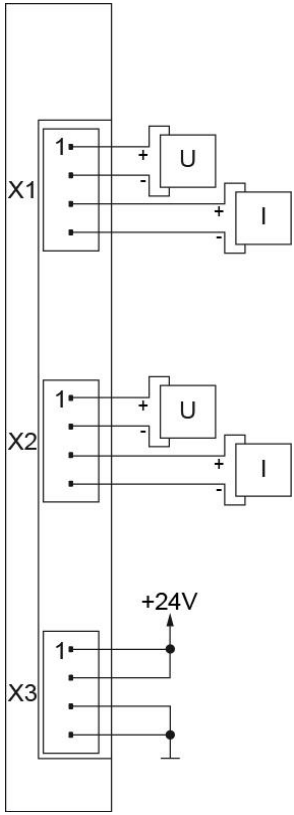

8.2 Notes

The signals recorded by the analog modules are very small, as compared to the digital signals. To ensure error-free operation, a careful wiring method must be followed:

- The 0 V connection of the supply voltage must be connected with the 0 V collection point over the shortest route possible.
- The DIN rail must have an adequate mass connection.
- The lines connected to the source of the analog signals must be as short as possible and parallel wiring to digital signal lines must be avoided.
- The signal lines must be shielded.
- The shielding must be connected to a shielding bus.
- Protective circuits for all relays (RC networks or free-wheeling diodes)
- Correct wiring to mass

INFORMATION

Connect the ground bus to the control cabinet.

The S-DIAS module CANNOT be connected/disconnected while voltage is applied!

9 Assembly/Installation

9.1 Check Contents of Delivery

Ensure that the contents of the delivery are complete and intact. See chapter Contents of Delivery.

INFORMATION

On receipt and before initial use, check the device for damage. If the device is damaged, contact our customer service and do not install the device in your system.

Damaged components can disrupt or damage the system.

9.2 Mounting

The S-DIAS modules are designed for installation into the control cabinet. To mount the modules a DIN-rail is required. The DIN rail must establish a conductive connection with the back wall of the control cabinet. The individual S-DIAS modules are mounted on the DIN rail as a block and secured with latches. The functional ground connection from the module to the DIN rail is made via the grounding clamp on the back of the S-DIAS modules. The modules must be mounted horizontally (module label up) with sufficient clearance between the ventilation slots of the S-DIAS module blocks and nearby components and/or the control cabinet wall. This is necessary for optimal cooling and air circulation, so that proper function up to the maximum operating temperature is ensured.

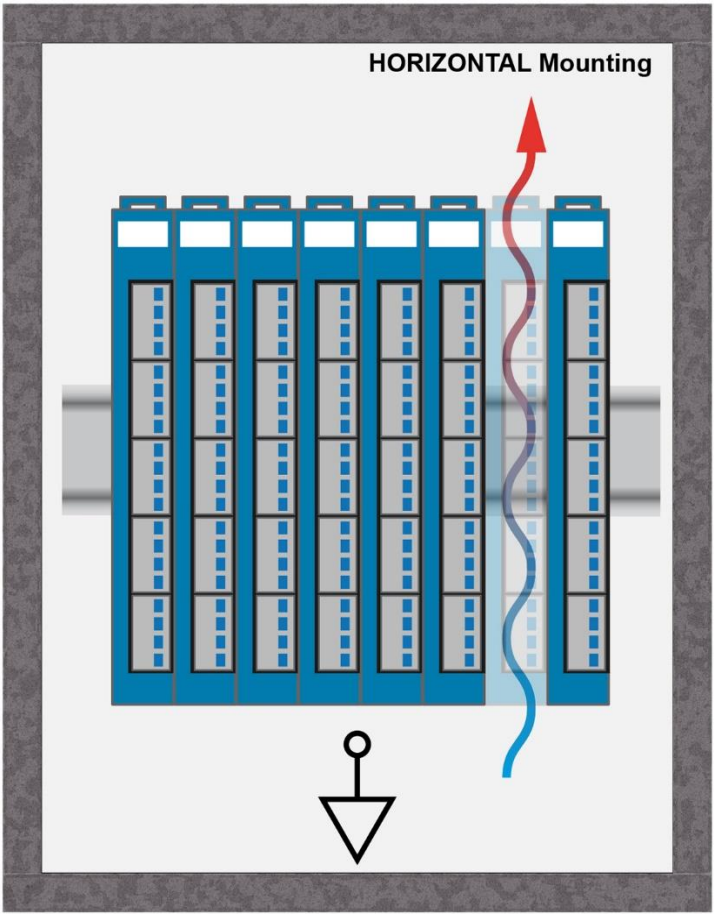

Recommended minimum distances of the S-DIAS modules to the surrounding components or control cabinet wall:

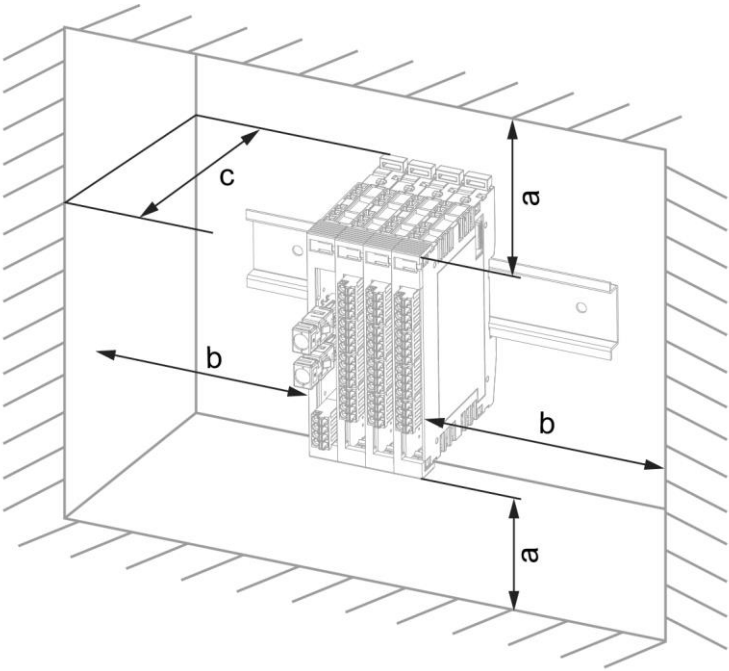

a	b	c
30 mm (1.18″)	**30 mm** (1.18″)	**100 mm** (3.94″)

a, b, c … distances in mm (inches)

10 Addressing

10.1 Address Mapping Overview

Address (hex)	Size (bytes)	Description
0000	128	Cyclic Data for Firmware
0080	128	cCyclic Data for the HW class
0100	128	CFG for the Firmware
0180	128	CFG/version for the HW class
0300	128	SDO access

10.2 Detailed Address Mapping

Cyclic Data for Firmware (mem – address range)		
0000	2	Analog output 1
0002	2	Analog output 2
Cyclic Data for the HW Class (mem - address range)		
0080	2	Status information Bit 0 24 V DC not OK Bit 1 no sync Bit 2 FLASH data CRC error Bit 3 RAM data CRC error Bit 4 unsafe FLASH data Bit 5 bus-time not supported
0082	2	Error information Bit 0 cable break analog output 1 Bit 1 cable break analog output 2 Bit 2 temperature > 142 °C analog output 1 Bit 3 temperature > 142 °C analog output 2 Bit 4 over current analog output 1 Bit 5 over current analog output 2 Bit 6 DC not OK analog output 1 Bit 7 DC not OK analog output 2
CFG for the Firmware (mem – address area)		
0100	2	CRC16
0102	2	data length

0104	1	info (special-purpose or status bits) Bit 0 PMB mode 0 ... normal mode 1 … PMB Mode -> output without adjustment data Bit 1 boot loader/update request
0105	1	reserved
0106	1	selection of the analog output Bit 0 0 … Output 1 Voltage 1 … Output 1 Current Bit 1 0 … Output 2 Voltage 1 … Output 2 Current Bit 4 0 … Output 1: Voltage: -10 … +10 V Current: 0-20 mA 1 … Output 1: Voltage: 0 ... +10 V Current: 4-20 mA Bit 5 0 … Output 2: Voltage: -10 … +10 V Current: 0-20 mA 1 … Output 2: Voltage: 0 ... +10 V Current: 4-20 mA
0107	1	Bit 0 0 … Output 1 inactive 1 … Output 1 active Bit 1 0 … Output 2 inactive 1 … Output 2 active
0108	2	message counter (from the HWC)
CFG/version for HW class (mem – address area)		
0180	2	CRC16
0182	2	data length
0184	2	firmware version
0186	2	message counter (return to the HWC)
SDO access (mem – address range)		
0300	128	SDO request
0380	128	SDO response

11 Supported Cycle Times

11.1 Cycle Times below 1 ms (in µs)

FW	50	100	125	200	250	500
V1.00					x	x

11.2 Cycle Times equal to or above 1 ms (in ms)

FW	1	2	3	4	5	6	7	8	9	10	11	12	13	14	15	16
V1.00	x	x		x				x								x

FW	17	18	19	20	21	22	23	24	25	26	27	28	29	30	31	32
V1.00																

12 Transport/Storage

INFORMATION

This device contains sensitive electronics. During transport and storage, high mechanical stress must therefore be avoided.

For storage and transport, the same values for humidity and vibration as for operation must be maintained!

Temperature and humidity fluctuations may occur during transport. Ensure that no moisture condenses in or on the device, by allowing the device to acclimate to the room temperature while turned off.

When sent, the device should be transported in the original packaging if possible. Otherwise, packaging should be selected that sufficiently protects the product from external mechanical influences. Such as cardboard filled with air cushioning.

13 Storage

INFORMATION

When not in use, store the operating panel according to the storage conditions. See chapter 12.

During storage, ensure that all protective covers (if available) are placed correctly, so that no contamination, foreign bodies or fluids enter the device.

14 Maintenance

INFORMATION

During maintenance as well as servicing, observe the safety instructions from chapter 2 Basic Safety Directives.

14.1 Service

This product was constructed for low-maintenance operation.

14.2 Repair

INFORMATION

In the event of a defect/repair, send the device with a detailed error description to the address listed at the beginning of this document.

For transport conditions, see chapter 12 Transport/Storage.

15 Disposal

INFORMATION

Should you need to dispose of the device, the national regulations for disposal must be followed.

The device appliance must not be disposed of as household waste.

16 Hardware Class AO026

Hardware Class AO026 for the S-DIAS AO026 Analog Output Module

```
SDIAS:19, AO026 (AO0261)
  S Class State (ClassState) <-[]->
  S Device ID (DeviceID) <-[]->
  S FPGA Version (FPGAVersion) <-[]->
  S Hardware Version (HwVersion) <-[]->
  S Serial Number (SerialNo) <-[]->
  S Retry Counter (RetryCounter) <-[]->
  O LED Control (LEDControl) <-[]->
  S Firmware Version (FirmwareVersion) <-[]->
  S Firmware Error Status (FWErrorBits) <-[]->
  S Extern Voltage Ok (ExternVoltageOk) <-[]->
    ---------------------- Analog Outputs -------
  O Analog Output 1 (AO1) <-[]->
  O Analog Output 2 (AO2) <-[]->
    ALARM:00, Empty
```

This hardware class is used to control the AO 026 hardware module. The module has ±10 V, 0-10 V or 0-20 mA, 4-20 mA analog outputs. More information on the hardware can be found in the module documentation.

16.1 General

Class State	State	This server shows the actual status of the hardware class.
Device ID	State	The device ID of the hardware module is shown in this server.
FPGA Version	State	FPGA version of the module in 16#XY (e.g. 16#10 = version 1.0).
Hardware Version	State	Hardware version of the module in format 16#XXYY (e.g. 16#0120 = Version 1.20)
Serial Number	State	The serial number of the hardware module is shown in this server.
Retry Counter	State	This server increments when a transfer fails.
LED Control	Output	With this server, the application LED of the S-DIAS module can be activated to find the module in the network more quickly. 0 LED off 1 LED on 2 blinks slowly 3 blinks rapidly
Firmware Version	State	The firmware version of the hardware module is shown in this server.
Firmware Error Status	State	On this server the error status bits of the FW are shown. Bit 0 DC not OK Bit 1 no Sync available Bit 2 Flash Data CRC Error Bit 3 Ram Data CRC Error Bit 4 invalid EEProm version Bit 17 cable break AO1 Bit 18 cable break AO2 Bit 19 over temperature AO1 Bit 20 over temperature AO2 Bit 21 over current AO1 Bit 22 over current AO2 Bit 23 supply voltage AO1 not OK Bit 24 supply voltage AO2 not OK
Extern Voltage OK	State	This server indicates whether the external module supply is ok.
Required	Property	This client is active by default, which means that the S-DIAS hardware module at this position is mandatory for the system and can under no circumstances be disconnected or return an error. Otherwise, the entire hardware deactivated. If the hardware module is missing or removed, an S-DIAS error is triggered. If his client is initialized with 0, the hardware module located in this position is not mandatory. This means that it can be inserted or removed at any time. However, which components identified as "not required" should be selected with regard to the safety of the system.

16.2 Analog Outputs

Analog Output [1-2]	Output	Analog output [1-2] can be set over the Write() method. Values are output depending on configuration. With the Analog Output Config 4-7, the output value can be overridden with the overrange settings. 8 % for voltage 1 % for current
Analog Output [1-2] Config	Property	The desired analog output type and its range must be selected here as Init value. Possible values: 0 Analog output -10 ... +10 V 1 Analog output 0-10 V 2 Analog output 0-20 mA 3 Analog output 4-20 mA Over range settings: Voltage ±8 %, current ±1 % 4 Analog output -10.8 ... +10.8 V 5 Analog output 0-10.8 V 6 Analog output 0-20.2 mA 7 Analog output 3.8-20.2 mA
Analog Output [1-2] Channel Active	Property	Here, the channel can be activated/deactivated as Init value. 0 channel deactivated 1 channel activated
Analog Output [1-2] Minimal Value	Property	Minimum value of the output AO[1-2] as Init value. If this value is written to the respective channel server, the value depending on the Config settings is output on the module.
Analog Output [1-2] Maximal Value	Property	Maximum value of the output AO[1-2] as Init value. If this value is written to the respective channel server, the value depending on the Config settings is output on the module.

16.3 Communication Interfaces

ALARM	Downlink	With this downlink the corresponding alarm class can be placed via the hardware editor.

16.4 Internal Properties

The values for the analog output are transmitted as 16-bit value in a range of ±30,000 resp.0-60,000 increments.
To be able to use the full resolution of the DAC values for the minimum and maximum value settings are needed which allow 60,000 increments.
At ±10 V this then is e.g. ±30,000.

If the overrange setting is used, in the analog outputs ±8 % for voltage and ±1 % for current can be entered.

e.g.: Analog output Config = 4, Analog output Min/Max Value = ±30,000
Analog output 30,000 = 10 V 32,400 = 10.8 V,
Analog output -30,000 = -10 V -32,400 = -10.8 V

Documentation Changes

Change date	Affected page(s)	Chapter	Note
11.01.2017	3, 4	1.1 Analog Output Voltage Specifications 1.1 Analog Output Current Specifications	Formulation of analog precision
01.02.1017	3, 4	1.1 Analog Output Voltage Specifications 1.1 Analog Output Current Specifications	Refresh time of all channels
17.08.2017	7 10	1.5 Environmental Conditions 3.2 Applicable Connectors	Added operating conditions Added sleeve length Added info regarding ultrasonically welded strands
18.10.2017	11 15	3.3 Label Field 5 Mounting	Added chapter Graphic replaced
20.09.2018		3 Connector Layout	Note added
18.07.2019	18	7 Supported Cycle Times	Chapter added
08.09.2020		8 Hardware Class AO026	Chapter added
04.11.2020	15	5 Mounting	Expansion functional ground connection
06.12.2022	8	1.4 Miscellaneous	UKCA conformity
26.07.2023		Document	General chapters added, design