How SIGMATEK's innovative "Wireless Roaming Feature" enables almost unlimited range using its "HGW 1033" wireless control panel with Safety functions.

Wireless through Production

With its wirelessly communicating HMI panel series "HGW 1033", the Salzburg-based automation manufacturer SIGMATEK launched a smart and reliable solution for mobile machine operation three years ago, which works without a movement-restricting cable and provides complete Safety for humans and machines. The redundant WLAN data transmission with 2.4 and 5 GHz ensures that the wireless connection is always available. The TÜV-certified Safety functions such as emergency stop, confirmation button and key switch guarantee operation in accordance with SIL3/-PL-e. SIGMATEK engineers have now developed the "Wireless Roaming Feature", with which the range of the wireless HMI panels can be expanded as needed via the base stations configured as a bridge. Using this feature equipment operators can move more freely along the production line. By Mag. Ingrid Traintinger

Wireless and Safety Unified

Since 2018, SIGMATEK has provided wireless operating solutions with Safety-to-go. This consists of three main components: a wireless panel of the "HGW 1033" series with the TÜV-certified Safety elements emergency stop, confirmation button and key switch (SIL3/PL e), the "BWH 001" base station as the access point and an "S-DIAS Safety" control. In the SIGMATEK concept, the "HGW" panel is directly coupled to the selected machine and Safety control. The base station serves as the communication bridge between the wireless and cable-connected networks. The advantage here is that a "BWH 001" base station is not required for each machine, which can reduce costs. The process for coupling the wireless panel with the Safety control looks like this: A light pillar is located on the "BWH 001" base station that sends light signals while coupling with the machine, which can be redirected to external indicator lights so the right machine or emergency stop circuit can be kept in sight during the coupling process. With complex and often hundreds-meter long machines and systems, many base stations and also often, multiple wireless panels are in use.

Securely Transmit Safety Data

Safety-relevant data is transferred, as with the cable-connected technology, via the "Black Channel" method. Using this principle, data transmission over the supposed non-safe network connection is monitored for integrity by a higher level safe communications protocol from the Safety CPU. The process makes data exchange independent from the physical transmission medium used and enables the transmission medium itself to be extracted from the Safety assessment. Whether WLAN, Bluetooth, cable or infrared is used on the physical level therefore makes no difference. To increase the quality of the wireless transmission in the immediate machine environment, a redundant transmission process is implemented. Safety and payload data are sent simultaneously over two WLAN frequencies – 2.4 and 5 GHz. The redundant transmission of Safety data increases the availability of the HMI significantly. If one of the wireless connections is interrupted, because the user moved too far away from the machine or base station, the safe communication is maintained via the second connection. The visualization application continuously informs the user of the actual connection quality. »

Wireless is in trend and is increasingly finding its way into machine halls. In particular, wireless operation and observation attracts a lot of interest. WLAN panels are the right choice when absolute freedom of movement is required, as is especially the case during set-up, when the operator has to change position frequently. But also for daily operation and monitoring, wireless HMIs simplify working on large scale and interconnected systems. The cable, which constantly had to be unplugged and reconnected, has been eliminated – along with the potential tripping hazard. When it comes to wireless operation in industrial environments, the following factors are deciding in conversations with machine and equipment builders: For one, a reliable connection with the machine to control and data security – especially for applications where security is critical when Safety elements are integrated into the HMI. And the bigger and more complex the system to operate is, the more frequently the question arises as to what the coverage over the entire production line looks like.

The three main components of the safe wireless operating solution from SIGMATEK: The 10.1" multi-touch panel "HGW 1033-3", the "BWH 001" base station and the "S-DIAS Safety" control.

This provides the operator with the flexibility to react to changed network conditions and take the appropriate measures. If several base stations are in use, the new "Wireless Roaming Feature" provides reliable and nearly unlimited WLAN coverage.

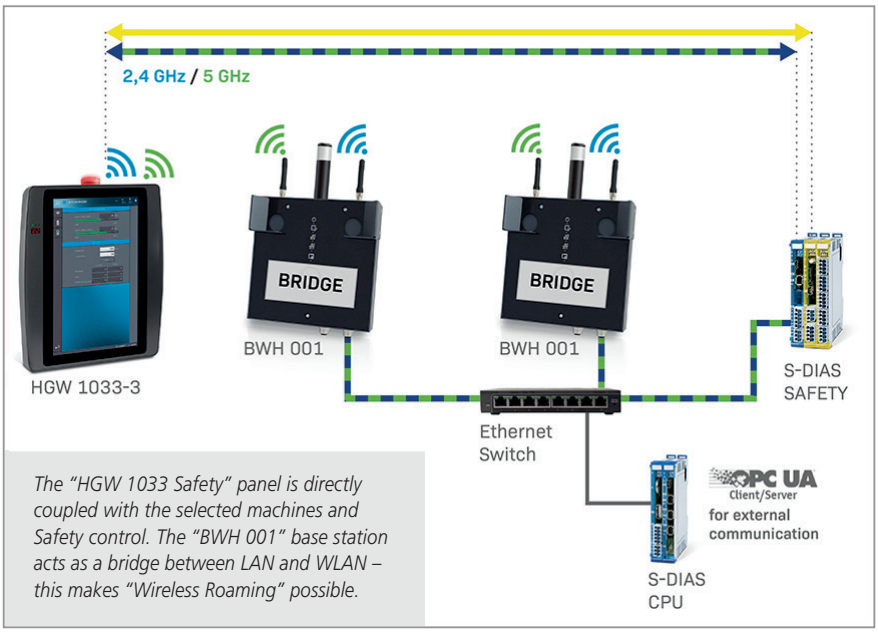

The "HGW 1033 Safety" panel is directly coupled with the selected machines and Safety control. The "BWH 001" base station acts as a bridge between LAN and WLAN – this makes "Wireless Roaming" possible.

Unlimited Range with Roaming

Roaming provides an unlimited extension of the WLAN range and means that at any point in time, an active data connection is available over one of the two frequencies. The "Wireless Roaming" technology allows Safety coupling directly between the "HGW" panel and the Safety control in the machine. The Safety CPU checks the Safety data packets sent from the operating panel via the "Black Channel" process for validity. The base station acts as a bridge between LAN and WLAN. By combining the interfaces of the base stations used, all network participants ("HGW", machine/Safety control) are connected to one another over a single subnetwork. To operate the network at high performance with low latency, SIGMATEK decided to use a VLan (Virtual Local Area Network). This prevents higher level company networks from influencing the transmission times. The existing network infrastructure can still be used. The network is quickly configured. Each base station has only one IP address. Complex structures with countless subnets are therefore unnecessary. Even complex systems, which consist of multiple operating panels, base stations and Safety controls, can be configured in the shortest time. For configuring a roaming system, any number of the individual system components can be combined: many base stations for the desired network coverage, multiple Safety controls for dividing the system into Safety zones and the desired number of HMI panels for the system operators. The integration of wireless operation in the control system or data exchange with existing control systems of third-party manufactures is performed via the integrated OPC UA interface of SIGMATEK's standard process controls. The 25 mm wide CPU component "CP112" with its two independent Ethernet ports, for example, acts as the perfect gateway to the outside world.

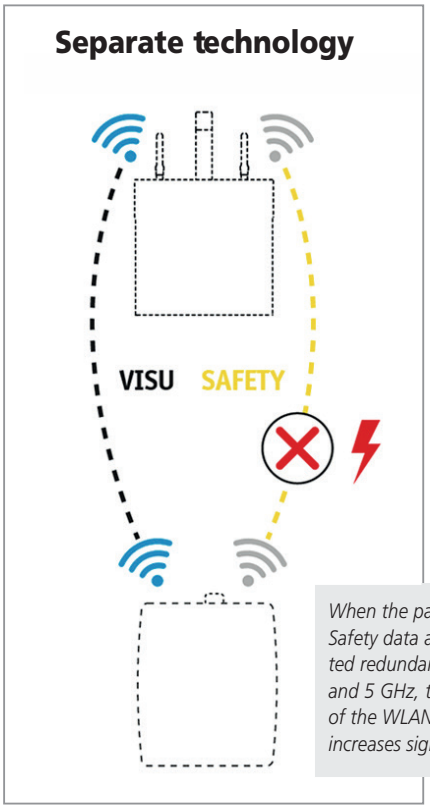

When the payload and Safety data are transmitted redundantly with 2.4 and 5 GHz, the reliability of the WLAN transmission increases significantly.

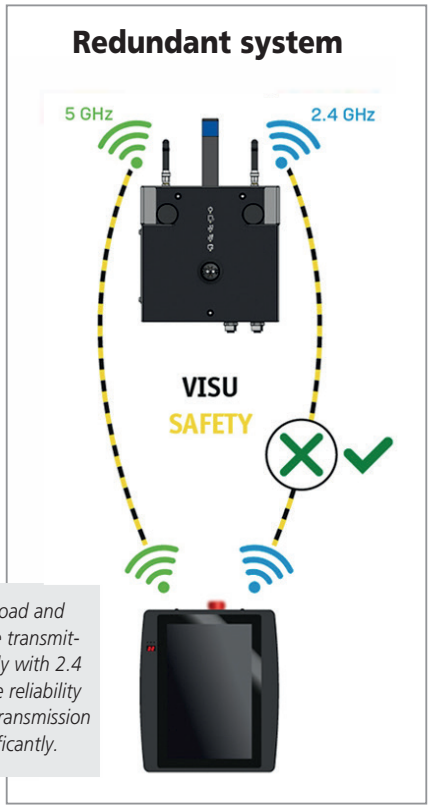

Increased Usability

For the user, the "Wireless Roaming Feature" brings significant benefits for operating comfort, functionality and system availability. In the "HGW" visualization, all available machines are displayed. The operator wirelessly connects to the desired machine or system sector through the "HGW 1033". While the user moves along the system, the panel scans for the best network based on the current RSSI signal strength. Switching networks can be triggered by a user action or automatically.

Fotos: Sigmatek, Adobe Stock

Interview with Erwin Bernroitner, expert for wireless operating solutions at SIGMATEK

What does unlimited range mean?

Austromatisierung: *Mr. Bernroitner, is the recently introduced "Wireless Roaming Feature" the logical evolution of mobile, wireless machine operation from SIGMATEK?*

Erwin Bernroitner: Since our handheld operating panels from the "HGW 1033" series were introduced to the market in 2018, there has been high demand for wireless operating solutions with Safety. The areas of applications are wide ranging and extend from robot-teaching to production machines, logistics, handling, automobile design and stage technology to steel works. From the most varying requirements of machine and equipment builders from all over the world, we recognized that in addition to the wireless operation of robots and compact machines, extensive production and assembly lines could also massively profit from the new operating freedom. Such systems are often angled and can extend over hundreds of meters. With our new roaming function, we can perfectly cover the need for wide-ranging seamless and reliable wireless operation.

Austromatisierung: *In concrete terms, how does it work in practice?*

Bernroitner: Simply explained, roaming allows the unlimited extension of the WLAN range. Since our wireless operating system has unlimited scalability, scenarios with any number of mobile HMIs are supported. The number and configuration of the base stations are thereby adapted to the spatial conditions. Each base station operates as an access point and at the same time, a charging station for the mobile HMIs. The WLAN is widely available and operators move freely along the machine or through the plant with the wireless HMIs - and the secure connection remains permanently in place. The number of WLAN networks can be freely defined and zones can also be created.

Austromatisierung: *Can the wireless solution also be integrated into existing systems?*

Bernroitner: Yes, together with our clients, we have already done so quite often. Modern controls have one or more standard Ethernet interfaces. Through these interfaces, which allow the use of various protocols such as OPC UA, Modbus TCP and Profinet, our wireless operating solution with Safety can be incorporated into existing control systems. The Safety technology is integrated via simple wiring. The status information of the SIGMATEK Safety CPU is also provided over the bus system. The states of the emergency stop button, the key switch and the confirmation button on the operating device can be sent to the control or main CPU for enabling functions. In practice, wide-ranging systems are divided into several Safety zones that are coupled with the Safety CPU from our "SCP" series.

Austromatisierung: *Is there really no limit with the "Wireless Roaming" concept?*

Bernroitner: The configuration of the wireless network and the number of devices used is practically unlimited. One of our clients for example, currently has over 30 base stations and 20 "HGW" operating panels in use at his expansive steel-processing plant. Each operator is equipped with their own wireless Safety panel. The software application in the handheld panel configures and manages the available wireless connections independently.

The operator does not require any networking experience, a connection is made with the desired system component in the selected Safety zone using the menu guide.

Austromatisierung: *Thank you for the interview*

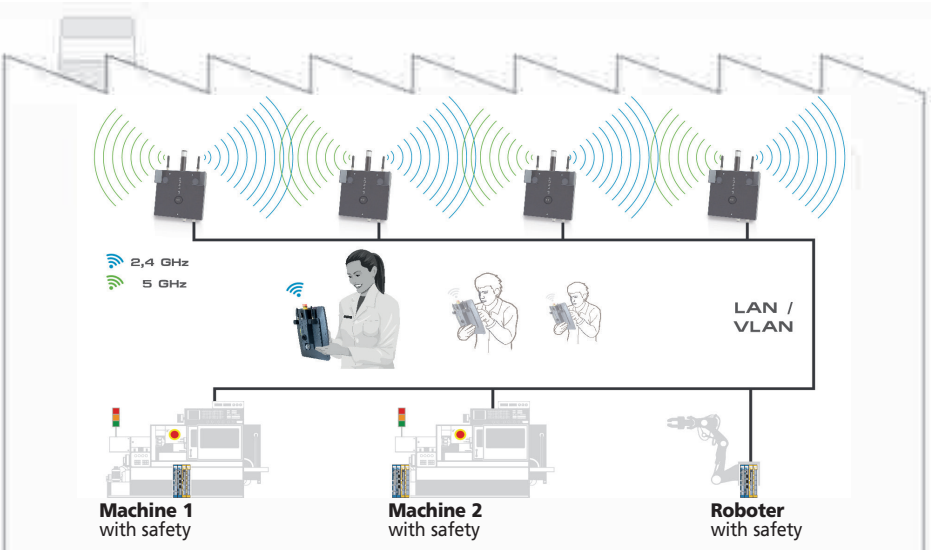

Guided by the menu, the operator connects the SIGMATEK wireless panel with the desired system component and the corresponding Safety zone. Thanks to "Wireless Roaming", the operator can move around the system with complete freedom. VLAN provides economic and simple installation into an existing network architecture.

The wireless panel leaves the current base station only when one of the two redundant radio channels is reliably connected to the next base station with the optimal signal strength.

About the Author:
Mag. Ingrid Traintinger is Head of Marketing Communications at SIGMATEK in Lamprechtshausen.

INFOLINK: www.sigmatek-automation.com