BWH 001

WLAN HGW Base Station

Operating Manual

Date of creation: 06.08.2018 | Version date: 18.08.2022 | Article number: 12-246-001-E

Publisher: SIGMATEK GmbH & Co KG
A-5112 Lamprechtshausen
Tel.: +43/6274/4321
Fax: +43/6274/4321-18
Email: office@sigmatek.at
WWW.SIGMATEK-AUTOMATION.COM

Translation from German

Base Station BWH 001

The BWH 001 base station acts as a gateway and establishes a connection between an HGW and a machine control. Depending on the S-DIAS controller used (e.g. CP/SCP 111), both safety data (via black channel) and non-safety data can be transmitted redundantly. In addition, the BWH 001 serves as a receiving and charging station for the HGW.

The signal lamp allows a simple coupling between HGW and machine. States can be made visible via programmable pictogram LEDs. The base station can also communicate with other controllers over an Ethernet interface.

Contents

1 Introduction

1.1 Target Group/Purpose of this Operating Manual

This operating manual contains all information required to operate this product.

This operating manual is intended for:

- Project planners
- Technicians
- Commissioning engineers
- Machine operators
- Maintenance/test technicians

General knowledge of automation technology is required.

Further help and training information, as well as the appropriate accessories can be found on our website www.sigmatek-automation.com.

Our support team is also happily available to answer your questions.
Please see our website for our hotline number and business hours.

1.2 Important Reference Documentation

- Safety System Handbook
- HGW_BWH_Configuration Manual
- WLAN Configuration
- Connection Cables for Operating Devices

This and additional documents can be downloaded from our website or obtained through SIGMATEK Support.

1.3 Contents of Delivery

1x BWH 001

2 Basic Safety Guidelines

2.1 Symbols Used

The following symbols are used in the operator documentation for warning and danger messages, as well as informational notes:

DANGER

Danger indicates that death or serious injury **will** occur, if the specified measures are not taken.

⇨ To avoid death or serious injuries, observe the all guidelines.

Danger indique une situation dangereuse qui, faute de prendre les mesures adéquates, entraînera des blessures graves, voire mortelles.

⇨ Respectez toutes les consignes pour éviter des blessures graves, voire mortelles.

WARNING

Warning indicates that death or serious injury **can** occur, if the specified measures are not taken.

⇨ To avoid death or serious injuries, observe the all guidelines.

Avertissement d'une situation dangereuse qui, faute de prendre les mesures adéquates, entraînera des blessures graves, voire mortelles.

⇨ Respectez toutes les consignes pour éviter des blessures graves, voire mortelles.

CAUTION

Caution indicates that moderate to slight injury **can** occur, if the specified measures are not taken.

⇨ To avoid moderate to slight injuries, observe the all guidelines.

Attention indique une situation dangereuse qui, faute de prendre les mesures adéquates, peut entraîner des blessures assez graves ou légères.

⇨ Respectez toutes les consignes pour éviter des blessures graves, voire mortelles.

INFORMATION

Provides important information on the product, handling or relevant sections of the documentation, which require attention.

Fournit des recommendations importantes sur le produit, la manipulation ou sections relevantes de la documentation, qui nécessitent prêter une attention particulière.

Danger for ESD-sensitive components.

Les signes de danger pour les composants sensibles aux décharges électrostatiques.

Danger for persons with pacemakers, implanted defibrillators or other active implants.

Danger pour les personnes portant un stimulateur cardiaque, un défibrillateur implanté ou d'autres implants actifs.

2.2 Disclaimer

The contents of this operating manual were prepared with the greatest care. However, deviations cannot be ruled out. This operating manual is regularly checked and required corrections are included in the subsequent versions. The machine manufacturer is responsible for the proper assembly, as well as device configuration. The machine operator is responsible for safe handling, as well as proper operation.

The current operating manual can be found on our website. If necessary, contact our support.

Subject to technical changes, which improve the performance of the devices. The following operating manual is purely a product description. It does not guarantee properties under the warranty.

Please thoroughly read the corresponding documentation and this operating manual before handling a product.

SIGMATEK GmbH & Co KG is not liable for damages caused through non-compliance with these instructions or applicable regulations.

2.3 General Safety Guidelines

The Safety Guidelines in the other sections of this operating manual must be observed. These instructions are visually emphasized by symbols.

According to EU Guidelines, the operating instructions are a component of a product.

This operating manual must therefore be accessible in the vicinity of the machine since it contains important instructions.

This operating manual should be included in the sale, rental or transfer of the product, or its online availability indicated.

Maintain this operating manual in readable condition and keep it accessible for reference.

Regarding the requirements for Safety and health connected to the use of machines, the manufacturer must perform a risk assessment in accordance with machine guidelines 2006/42/EG before introducing a machine to the market.

Before commissioning this product, check that conformance with the provisions of the 2006/42/EG guidelines is correct. As long as the machine with which the with the product should be used does not comply with the guideline, operating this product is prohibited.

Operate the unit with devices and accessories approved by SIGMATEK only.

CAUTION

Handle the device with care and do not drop or let fall.

Prevent foreign bodies and fluids from entering the device.

The device must not be opened, otherwise it could be damaged!

The module complies with EN 61131-2.

In combination with a machine, the machine builder must comply with EN 60204-1 standards.

For your own safety and that of others, compliance with the environmental conditions is essential.

The control cabinet must be connected to ground correctly.

To perform maintenance or repairs, disconnect the system from the power supply.

2.4 Software/Training

The application is created with the software LASAL CLASS 2 and LASAL SCREEN Editor.

Training for the LASAL development environment, with which the product can be configured, is provided. Information on our training schedule can be found on our website.

3 Norms and Guidelines

3.1 Technical Guidelines

WARNING

The HGW and BWH form a communications unit, which must be configured by trained personnel. Among other things, careful allocation of the wireless channels must be ensured. Complete, seamless availability must be guaranteed over the entire area of operation to ensure that no dead spots exist at any location in the area of operation.

Le HGW et le BWH constituent une unité de communication qui doit être configurée par un personnel qualifié. Entre autres, il faut s'assurer que l'attribution des canaux sans fil est faite avec soin. Une disponibilité complète et sans faille doit être garantie sur l'ensemble de la zone d'exploitation afin de s'assurer qu'il n'y a pas de zones mortes en tout point de la zone d'exploitation.

The electrical connections cannot be removed while voltage is applied. Before removing connections, a controlled shutdown of the machine must be performed and the supply disconnected.

After shutdown or disconnection of the voltage supply, a wait-time of 5 minutes is required before voltage conducting components can be touched or connectors removed.

The machine manufacturer is responsible for ensuring the correct handling of modules and if necessary, for taking organizational measures to secure access.

3.2 Guidelines

The product was constructed in compliance with the following European Union guidelines and tested for conformity:

3.2.1 EU Declaration of Conformity

EU Declaration of Conformity

The product BWH 001 conforms to the following European guidelines:

- **2014/35/EU** Low-voltage guideline
- **2014/30/EU** Electromagnetic Compatibility (EMC guideline)
- **2014/53/EU** Wireless Device Guideline
- **2011/65/EU** Restricted use of certain hazardous substances in electrical and electronic equipment (RoHS Guideline)

The EU Conformity Declarations are provided on the SIGMATEK website. See: Products/downloads or use the search function and keyword “EU Declaration of Conformity”.

4 Technical Data

4.1 Performance Data

Processor	EDGE2 Technology
Processor cores	1
Internal cache	32-kbyte L1 Instruction Cache 32-kbyte L1 Data Cache 512-Kbyte L2 Cache
Internal program and data memory (DDR3 RAM)	256-Mbyte
Internal remnant data memory	no
Internal storage device	512-Mbyte microSD card, expandable
Internal I/O	no
Interfaces	1x magnetic connector for charging the battery 1x M12 connector supply and Ethernet 1x M12 connector Ethernet 1x USB 2.0 Type-C (Dual Role Port) 1x WLAN dual-band (2.4 GHz, 5 GHz simultaneously)
Status LEDs	1x Power 1x HGW-Link (freely programmable) 2x Network (freely programmable) 1x application-/RUN-LED
Signal generator	no
Cooling	passive (fanless)
Coupling confirmation	signal light
Input voltage measurement	no

4.2 Electrical Requirements

Supply voltage	typically +24 V DC (SELV/PELV)	
	minimum +20 V DC	maximum +30 V DC
Protection class	III	
Inrush current	16.1 A for 1 ns	
Current consumption of +24 V power supply	ca. 200 mA in CLI maximum 2.5 A charging at full capacity at +24 V	
USB Host current load	maximum 0.5 A	

The specified current consumption relates to the status without connected peripherals (USB stick ...)

4.3 Environmental Conditions

Storage temperature	-5 ... +60 °C	
Environmental temperature	0 …+50 °C	
Humidity	10-95 %, non-condensing	
EMC resistance	EN 61000-6-2 (industrial area)	
EMC noise generation	EN 61000-6-4	
Shock resistance	EN 60068-2-27	150 m/s²
Vibration resistance	10 m/s²	
Protection type	EN 60529	IP54
Free fall (with packaging)	IEC 60068-2-32	1000 mm

4.4 Wireless

4.4.1 WLAN 2.4 GHz

Frequency range	2399.5-2484.5 MHz
Transmission power max.	20 dBm (100 mW) EIRP
Channels	1-13 (2412-2472 MHz) (1)
Standards	IEEE 802.11 b/g/n

4.4.2 WLAN 5 GHz

Frequency range	5150-5350 MHz 5470-5725 MHz
Transmission power max.	23 dBm (200 mW) EIRP
Channels	36-48 (5180-5240 MHz) (1) 149-165 (5745-5825 MHz) (1)
Standards	IEEE 802.11 a/n/ac

4.4.3 Antennae

Number	2
Frequency range	2.4/5 GHz (Dual-Band)
Transmission power max.	25 W
Antennae gain	2.4 GHz-4 dBi Peak Gain 5 GHz-5.2 dBi Peak Gain
Impedance	50 Ω
Transmission angle/ characteristics	transmission characteristics: omnidirectional Polarization: linear

The devices can only be used in the country designated or preconfigured for this purpose, as the maximum permitted transmission power can greatly differ.

Please note that DFS/TPC is inactive on our devices and we therefore do not recommend the corresponding channels!

Non-compliance with these specifications can result in legal consequences, for which SIGMATEK accepts no liability!

Already during the planning stage, caution must be taken to ensure that the radio channels are configured so that interference with other products is prevented.

(1) The document "WLAN Configuration" must be used for the configuration. All channels currently supported by the software and hardware are described there.

CAUTION

Only antennae approved by SIGMATEK can be used. See chapter 14.3 Antennae.

Seules les antennes recommandées par SIGMATEK peuvent être utilisées. Voir chapitre 13.3 Antennes.

Regularly check the screw fitting for the antennae. If necessary, manually tighten them or use a torque wrench (1 Nm) for RP-SMA sockets.

Vérifiez régulièrement le vissage des antennes. Si nécessaire, serrez-les manuellement ou utilisez une clé dynamométrique (1 Nm) pour les connecteurs RP-SMA.

4.5 Miscellaneous

Article number	12-246-001
Hardware version	1.x
Approvals	CE

5 Mechanical Dimensions

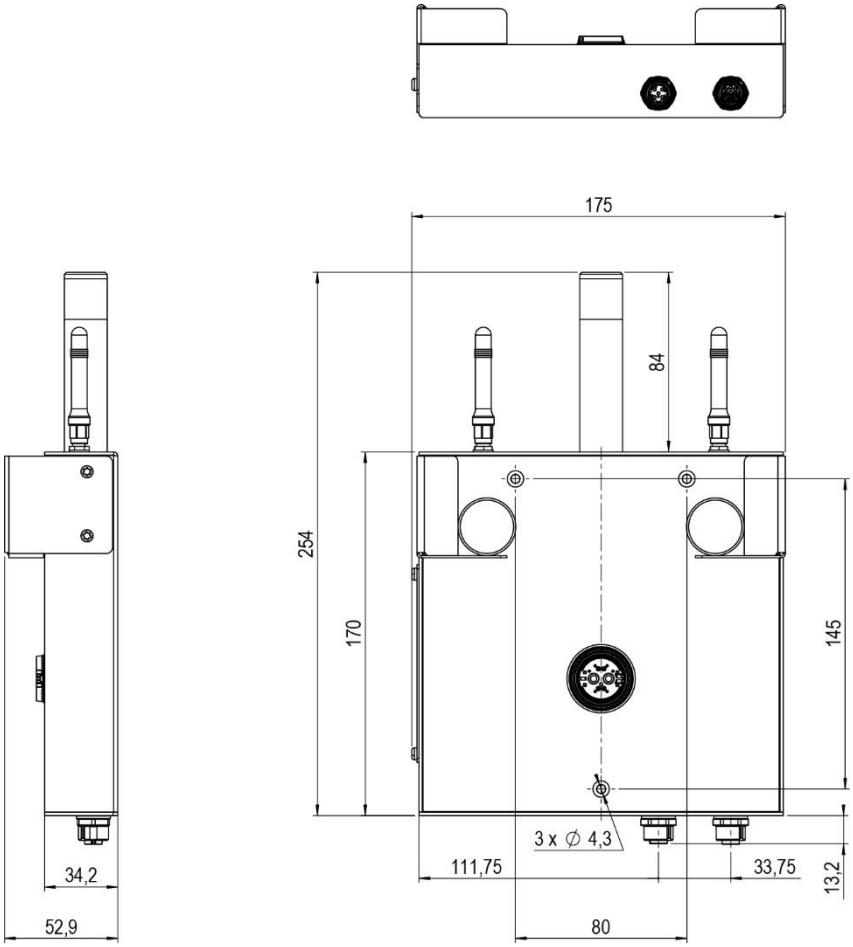

Dimensions	175 x 267.4 x 52.9 mm (W x H x D)
Material	housing: steel color: RAL7024 (powder coated) front: plexiglass
Weight	typically 1.55 kg

6 Interfaces

6.1 Connections Bottom

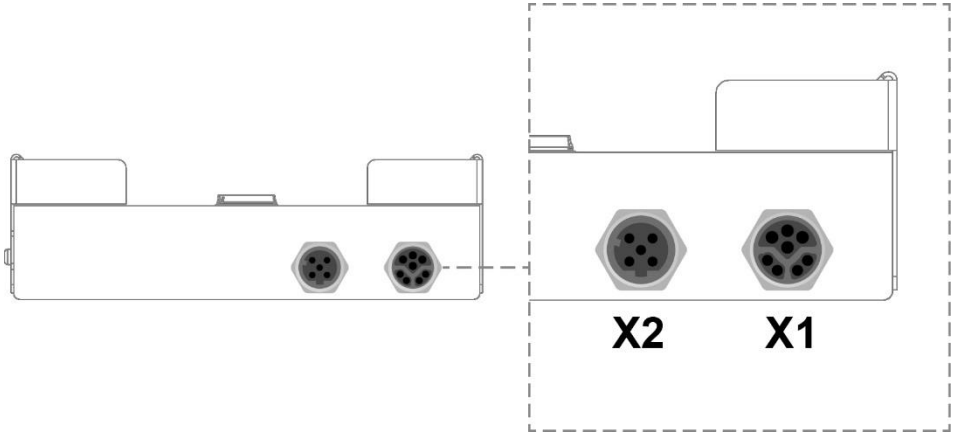

Appropriate connector cables are available as accessories.
See chapters 14.2 Cable.

6.1.1 X1: M12 Y-coded (supply, Ethernet)

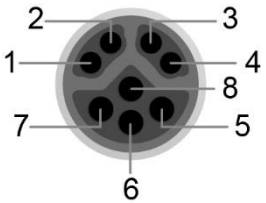

Pin	Function
1	Tx+
2	Tx-
3	Rx+
4	Rx-
5	VCC
6	n.c.
7	n.c.
8	GND

n.c. = do not use

6.1.2 X2: M12 D-coded (Ethernet)

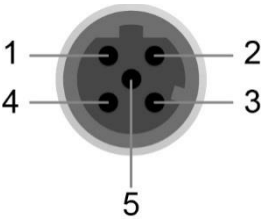

Pin	Function
1	Tx+
2	Rx+
3	Tx-
4	Rx-
5	n.c.

6.2 Side Connections

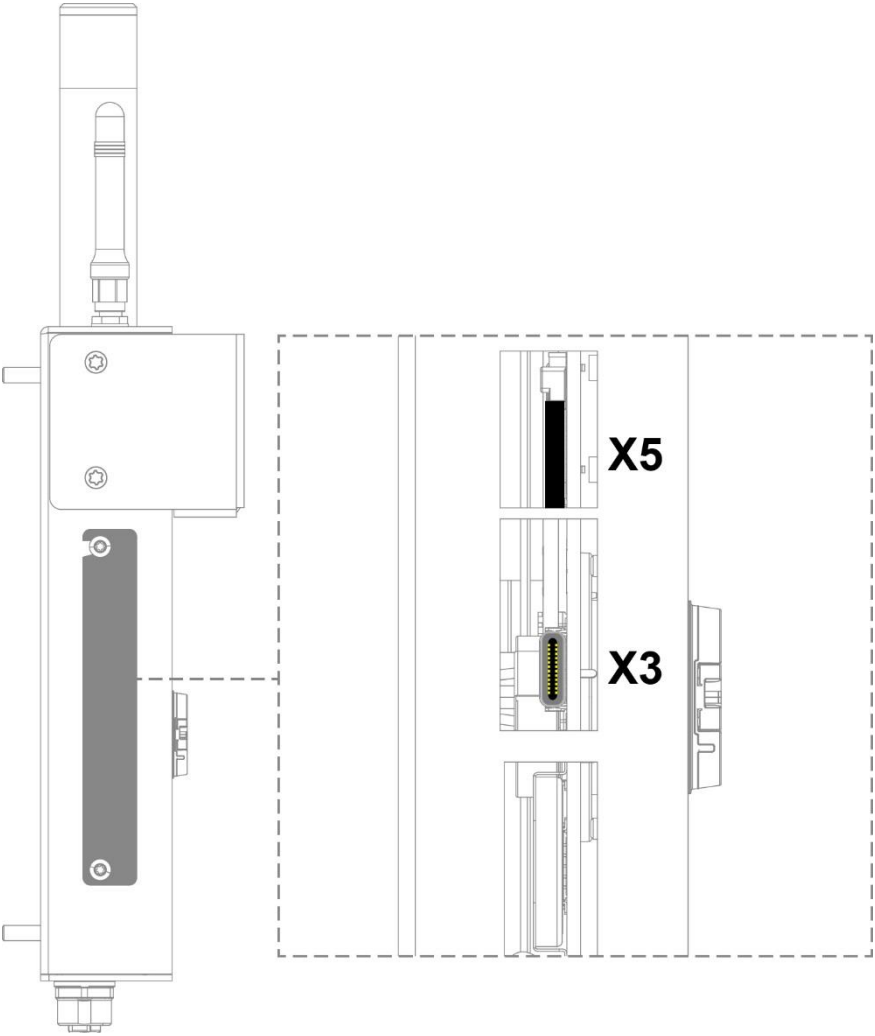

6.2.1 X3: USB 2.0 DualRole (Type C)

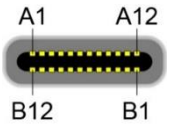

Pin	Function
A1, B1	GND
A2, B2	n.c.
A3, B3	n.c.
A4, B4	VBUS
A5, B5	CC1, CC2
A6, B6	USB2.0 D+
A7, B7	USB2.0 D-
A8, B8	SBU1, SBU2
A9, B9	VBUS
A10, B10	n.c.
A11, B11	n.c.
A12, B12	GND

The USB Type-C interface serves as the online interface between the device and the programming software.

It should be noted that many of the USB devices on the market do not comply with USB specifications; this can lead to device malfunctions. This can lead to malfunction of the device. It is also possible that these devices will not be detected at the USB port or function correctly. It is therefore recommended that every USB stick or USB supply be tested before actual use.

6.2.2 X5: microSD Card

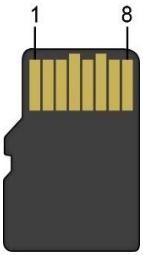

Pin	Function
1	DAT2
2	CD/DAT3
3	CMD
4	+3V3
5	CLK
6	GND
7	DAT0
8	DAT1

It is recommended that only storage media provided by SIGMATEK be used.

For the appropriate storage media, see chapter 14.1 microSD Card.

The number of read and write actions have a significant influence on the lifespan of the storage media.

The microSD card is not intended as an exchangeable medium and should therefore be removed from the card holder for maintenance purposes only.

6.3 Front connectors

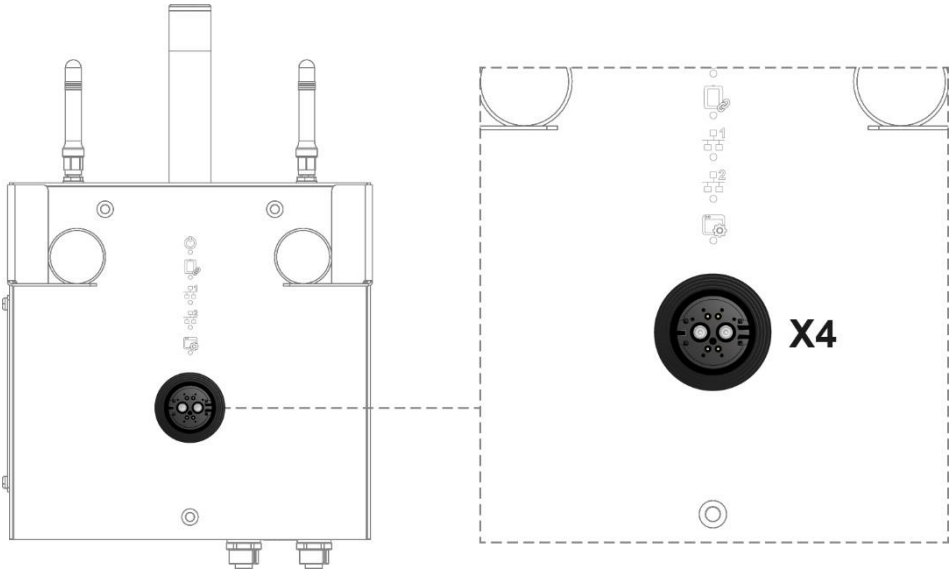

6.3.1 X4 Power/Data

Installed connector: Rosenberger M4S102-16C003A5-Y
Mating connector: Rosenberger M4K105-16C003B5-Y

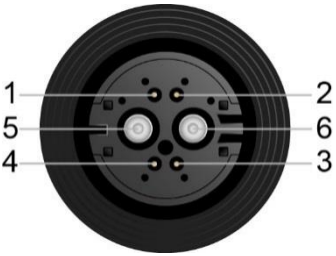

Pin	Function
1	HGW COM H
2	HGW COM L
3	Plugin detection
4	n.c
5	Charging voltage
6	GND

CAUTION

Ensure that the connector and its pins are always clean, since contamination can lead to leakage current while charging. This results in unexpected heating of the connector, which can cause serious injury or damage to the device.

Veillez à ce que le connecteur et ses broches soient toujours propres, car la contamination peut entraîner une fuite de courant pendant la charge. Il en résulte un échauffement inattendu du connecteur, qui peut provoquer des blessures graves ou endommager l'appareil.

6.4 Display

6.4.1 Front LEDs

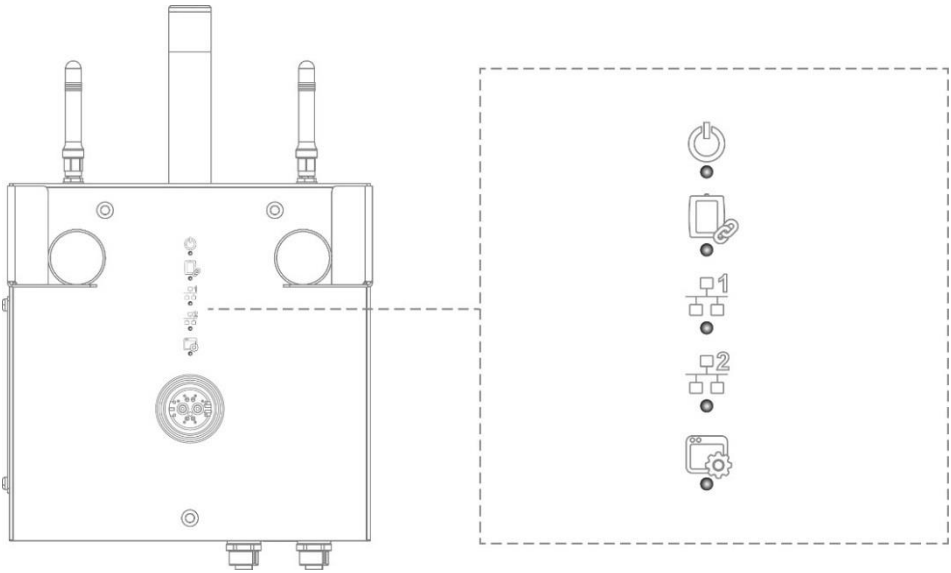

The HGW-Link display LEDs, as well as Ethernet 1/2, are controlled via the customer application. The following example is used as orientation for the application technician and serves as a recommendation.

Symbol	Name	LED Status	Definition
	Power	OFF RED GREEN	No current Under voltage Supply OK
	HGW-Link	RED YELLOW GREEN	Application-specific, e.g.: no connection WLAN HGW connected FSoE connection active
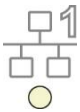	Ethernet 1	RED YELLOW GREEN	Application-specific, e.g.: no connection connected with control (CP/SCP) FSoE connection active
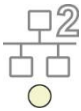	Ethernet 2	RED YELLOW GREEN	Application-specific like Ethernet 1 Connection to "external control" and for non-safety relevant data
	Application-specific	RED GREEN YELLOW	Blinks in CLI Run (can be changed via application)

6.4.2 Signal Light

The signal light is used to visually assist with the coupling of an HGW.

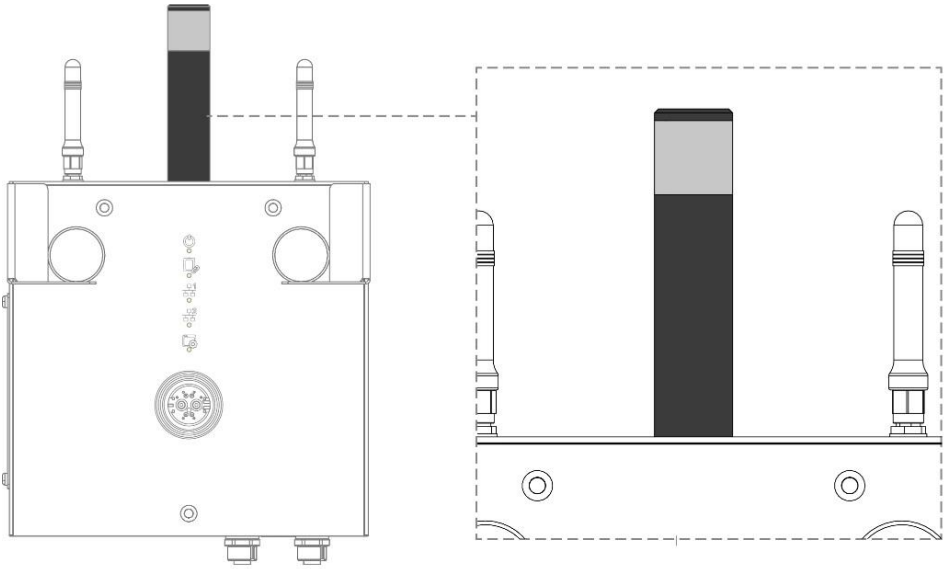

Status	Function
OFF	Coupling process inactive
Blinks blue	Coupling process active

6.5 WLAN

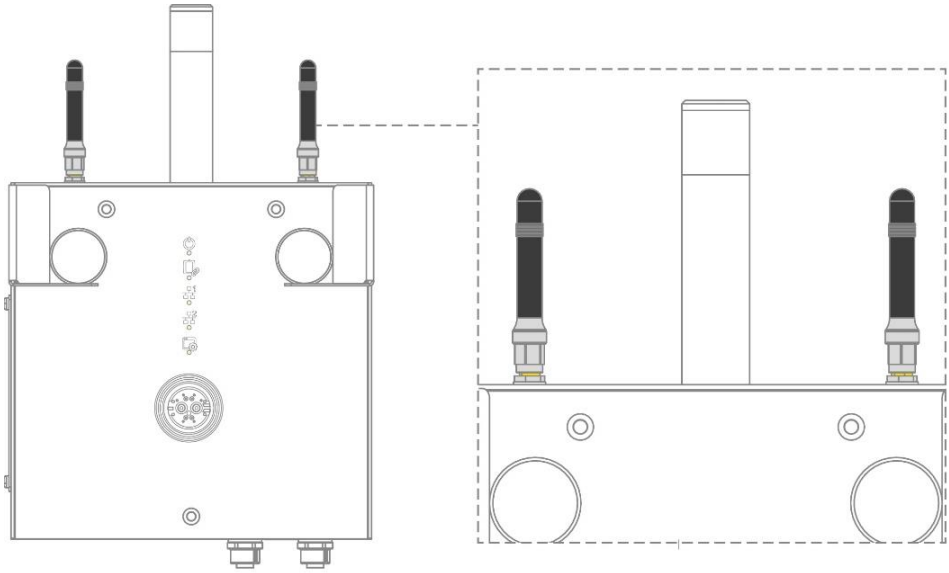

CAUTION

This device has sensitive antennae. These must be handled carefully and kept free from sources of interference (metal, hand). Otherwise, the error free function of the WLAN connection cannot be guaranteed.

Cet appareil est équipé des antennes sensibles. Elles doivent être manipulées avec précaution et maintenues à l'abri de toute source d'interférence (métal, main). Dans le cas contraire, la fonction sans erreur de la connexion WLAN ne peut pas être garantie.

DANGER

This device has wireless technologies, which can pose a danger to people with pacemakers! These individuals must comply with the pacemaker’s specifications.

Cet appareil est doté de technologies sans fil, ce qui peut présenter le danger pour les personnes portant un stimulateur cardiaque ! Ces personnes doivent se conformer aux spécifications du stimulateur cardiaque.

Only antennae approved by SIGMATEK GmbH & Co KG can be used. Other antennae can damage the device, as well as invalidate the radio permits.

7 Status and Error Messages

Status and error messages are shown in the status test of the LASAL CLASS software.

Number	Message	Definition	Cause/solution
00	**RUN RAM**	The user program is currently running in RAM. The display is not affected.	Info
01	**RUN ROM**	The user program stored in the program memory module was loaded into the RAM and is currently running. The display is not affected.	Info
02	**RUNTIME**	The total time for all cyclic objects exceed the maximum time; the time can be configured using 2 system variables: - Runtime: Remaining time - SWRuntime: Preset value for runtime counter	Solution: - Optimize the application's cyclic task. - Use higher capacity CPU. - Configure preset value
03	**POINTER**	Incorrect program pointers were detected before running the user program	Possible Causes: - The program memory module is missing, not programmed or defective. - The program in the user program memory (RAM) is not executable. - The buffering battery has failed. - The user program has overwritten a software error. Solution: - Reprogram the memory module, if the error reoccurs exchange the module. - Exchange the buffering battery. - Correct programming error
04	**CHKSUM**	An invalid checksum was detected before running the user program.	Cause/solution: s. POINTER

05	**WATCHDOG**	The program was interrupted via the watchdog logic.	Possible Causes: - User program interrupts blocked over a longer period of time (STI command forgotten). - Programming error in a hardware interrupt. - INB, OUTB, INW, OUTW instructions used incorrectly. - The processor is defective. Solution: - Correct programming error. - Exchange CPU
06	**GENERAL ERROR**	General error An error has occurred while stopping the application over the online interface.	This error occurs only during the development of the operating system.
07	**PROM DEFECT**	An error has occurred while programming the memory module.	Causes: - The program memory module is defective. - The user program is too large. - The program memory module is missing. Solution: - Exchange the program memory module
08	**RESET**	The CPU has received the reset signal and is waiting for further instructions. The user program is not processed.	Info
09	**WD DEFECT**	The hardware monitoring circuit (watchdog logic) is defective. After power-up, the CPU checks the watchdog logic function. If an error occurs during this test, the CPU deliberately enters an infinite loop from which no further instructions are accepted.	Solution: - Exchange CPU
10	**STOP**	The program was stopped by the programming system.	
11	**PROG BUSY**	reserved	
12	**PROGRAM LENGTH**	reserved	
13	**PROG END**	A memory module was successfully programmed.	Info
14	**PROG MEMO**	The CPU is currently programming the memory module.	Info

15	**STOP BRKPT**	The CPU was stopped by a breakpoint in the program.	Info
16	**CPU STOP**	The CPU was stopped by the programming software.	Info
17	**INT ERROR**	The CPU has triggered a false interrupt and stopped the user program or has encountered an unknown instruction while running the program.	Causes: - A nonexistent operating system was used. - Stack error (uneven number of PUSH and POP instructions). - The user program was interrupted by a software error. Solution: - Correct programming error.
18	**SINGLE STEP**	The CPU is in single step mode and is waiting for further instructions.	Info
19	**READY**	A module or project has been sent to the CPU and it is ready to run the program.	Info
20	**LOAD**	The program is stopped and the CPU is currently receiving a new module or project.	Info
21	**UNZUL. MODULE**	The CPU has received a module that does not belong to the project.	Solution: - Recompile and download the entire project
22	**MEMORY FULL**	The operating system memory /heap) is too small. No memory could be reserved while calling an internal function or an interface function is called from the application.	Causes: - Memory is only allocated but not released. Solution - Clear memory
23	**NOT LINKED**	When starting the CPU, a missing module or a module that does not belong to the project was detected.	Solution: - Recompile and download the entire project
24	**DIV BY 0**	A division error has occurred.	Possible Causes: - Division by 0. - The result of a division does not fit in the result register. Solution: - Correct programming error.
25	**DIAS ERROR**	While accessing a DIAS module, an error has occurred.	Hardware problem
26	**WAIT**	The CPU is busy.	Info

27	**OP PROG**	The operating system is currently being reprogrammed.	Info
28	**OP INSTALLED**	The operating system has been reinstalled.	Info
29	**OS TOO LONG**	The operating system cannot be loaded; too little memory.	Restart, report error to SIGMATEK.
30	**NO OPERATING SYSTEM**	Bootloader message. No operating system found in RAM.	Restart, report error to SIGMATEK.
31	**SEARCH FOR OS**	The bootloader is searching for the operating system in RAM.	Restart, report error to SIGMATEK.
32	**NO DEVICE**	reserved	
33	**UNUSED CODE**	reserved	
34	**MEM ERROR**	The operating system loaded does not match the hardware configuration.	Solution: - Use the correct operating system version
35	**MAX IO**	reserved	
36	**MODULE LOAD ERROR**	The LASAL Module or project cannot be loaded.	Solution: - Recompile and download the entire project
37	**BOOTIMAGE FAILURE**	A general error has occurred while loading the operating system.	Contact SIGMATEK
38	**APPLMEM ERROR**	An error has occurred in the application memory (user heap).	Solution: - Correct allocated memory access error
39	**OFFLINE**	This error does not occur in the control.	This error code is used in the programming system to show that there is no connection to the control.
40	**APPL LOAD**	reserved	
41	**APPL SAVE**	reserved	
44	**VARAN MANAGER ERROR**	An error number was entered in the VARAN manager and stopped the program.	Solution: - Read LogFile
45	**VARAN ERROR**	A required VARAN client was disconnected or communication error has occurred.	Solution: - Read LogFile - Error Tree

46	**APPL-LOAD-ERROR**	An error has occurred while loading the application.	Cause: - Application was deleted. Solution: - Reload the application into the control.
47	**APPL-SAVE-ERROR**	An error has occurred while attempting to save the application.	
50	**ACCESS-EXCEP-TION-ERROR**	Read or write access to a restricted memory area. (I.e. writing to the NULL pointer).	Solution: - Correct application errors
51	**BOUND EXCEEDED**	An exception error has occurred while accessing arrays. The memory area was overwritten by accessing an invalid element.	Solution: - Correct application errors
52	**PRIVILEDGED IN-STRUCTION**	An unauthorized instruction for the current CPU level was given. For example, setting the segment register.	Cause: - The application has overwritten the application program code. Solution: - Correct application errors
53	**FLOATING POINT ERROR**	An error has occurred during a floating-point operation.	
60	**DIAS-RISC-ERROR**	Error from the Intelligent DIAS Master.	Restart, report error to SIGMATEK.
64	**INTERNAL ERROR**	An internal error has occurred, all applications are stopped.	Restart, report error to SIGMATEK.
65	**FILE ERROR**	An error has occurred during a file operation.	
66	**DEBUG ASSERTION FAILED**	Internal error	Restart, report error to SIGMATEK.
67	**REALTIME RUNTIME**	The total duration of all real-time objects exceeds the maximum time; the time cannot be configured. 2 ms for 386 CPUs 1 ms for all other CPUs	Solution: - Real-time Optimize the application's real-time task (RtWork). - Real-time Reduce the clock time for the real-time task of all objects. - Correct application errors - CPU is overloaded in real-time => use a higher capacity CPU.
68	**BACKGROUND RUNTIME**	The total time for all background objects exceeds the maximum time; the time can be configured using 2 system variables: -BTRuntime: Remaining time -SWBTRuntime: Preset value for runtime counter	Solution: - Optimize the application's background task (background) - Use higher capacity CPU - Set SWBTRuntime correctly

70	**C-DIAS ERROR**	A connection error with a C-DIAS module has occurred.	Cause: - The cause of the error is documented in the log file Solution: - This depends on the cause
72	**S-DIAS ERROR**	A connection error with an S-DIAS module has occurred.	Possible Causes: - Real network does not match the project - S-DIAS client is defective Solution: - Analyze log file
75	**SRAM ERROR**	An error occurred while initializing, reading or writing SRAM data.	Possible Causes: - SRAM configured incorrectly - Battery for powering the internal program memory is empty Solution: - Analyze log file (Event00.log, Event19.log) - Check configuration - Exchange battery for powering the internal program memory
97	**USER DEFINED 2**	User-definable code.	
98	**USER DEFINED 3**	User-definable code.	
99	**USER DEFINED 4**	User-definable code.	
100	**C_INIT**	Initialization start; the configuration is run.	
101	**C_RUNRAM**	The LASAL project was successfully started from RAM.	
102	**C_RUNROM**	The LASAL project was successfully started from ROM.	
103	**C_RUNTIME**		
104	**C_READY**	The CPU is ready for operation.	
105	**C_OK**	The CPU is ready for operation.	
106	**C_UNKNOWN_CID**	An unknown object from a stand-alone or embedded object, or an unknown base class was detected.	

107	C_UNKNOWN_CONSTR	The operating system class cannot be created; the operating system is probably wrong.	
108	C_UNKNOWN_OBJECT	Indicates an unknown object in an interpreter program; more the one DCC080 object.	
109	C_UNKNOWN_CHNL	The hardware module number is greater than 60.	
110	C_WRONG_CONNECT	No connection to the required channels.	
111	C_WRONG_ATTR	Wrong server attributes.	
112	C_SYNTAX_ERROR	Non-specific error. Recompile and download all project sections.	
113	C_NO_FILE_OPEN	An attempt was made to open an unknown table.	
114	C_OUTOF_NEAR	Memory allocation failed	
115	C_OUT OF_FAR	Memory allocation failed	
116	C_INCOMAPTIBLE	An object with the same name already exists but has a different class.	
117	C_COMPATIBLE	An object with the same name and class exists but must be updated.	
224	LINKING	The application is currently linking.	
225	LINKING ERROR	An error has occurred while linking. An error messaged is generated in the LASAL status window.	
226	LINKING DONE	Linking is complete.	
230	OP BURN	The operating system is currently being burned into the Flash memory.	
231	OP BURN FAIL	An error has occurred while burning the operating system.	
232	OP INSTALL	The operating system is currently being installed.	
240	USV-WAIT	The power supply was disconnected; the UPS is active. The system is shut down.	
241	REBOOT	The operating system is restarted.	
242	LSL SAVE		
243	LSL LOAD		
252	CONTINUE		

253	**PRERUN**	The application is started.	
254	**PRERESET**	The application is ended.	
255	**CONNECTION BREAK**		

8 Transport/Storage

This device contains sensitive electronics. During transport and storage, high mechanical stress must therefore be avoided.
For storage and transport, the same values for humidity and vibration as for operation must be maintained!
During transport, temperature and humidity fluctuations may occur. Ensure that no moisture condenses within or on the device be letting the device climatize to the room temperature while turned off.

9 Assembly/Installation

9.1 Conditions

The following conditions must be met during assembly/installation:

- Do not install the base station/ handheld operating panel in a damp environment.
- The base station must be mounted near the equipment to control.
- If several units are placed in the immediate vicinity, the base station must be mounted in such a way that a clear optical assignment to the respective unit is visible.
- When mounting the base station on uneven surfaces, ensure that the base station is not subjected to torsion. Ensure that the base station is level.

It is also important to note that ...

- the base station is mounted so that it is possible to operate the HGW when properly hung.
- the base station is connected with the function ground via the cable shielding.
- removing the HGW should not be restricted.
- the signal range should be configured so that the handheld operating panel functions error-free throughout the entire operation area.
- the emergency stop should also be easily accessible when the panel is mounted.
- the HGW is placed, so that reflections on the display are largely avoided.
- the base station should be mounted at a height that ensures the user has an optimal view of the HGW display and ergonomic operation of the device when mounted on a vertical surface.
- to secure the base station, use 3 M4x40 oval head screws with a maximum head diameter of 7.8 mm. the torque cannot exceed 2 Nm.
- the antennae are not covered or damaged.

The handheld operating panel can be mounted in the base station, as well as used wirelessly within the signal range. See chapters 10.5 Operation.

Do not expose the BWH to extreme environmental conditions such as heat, humidity, strong magnetic fields, vibration or dust.

The base station should be mounted vertically or slightly inclined to the rear in order to prevent the HGW from falling out of the base station.

Ensure that the base station antennas are not shielded by metallic objects, as this can restrict the functional range.

When mounting the base station, ensure that the requirements for the antenna positions (dead spots), as well as operability (accessibility of the emergency stop) are met.

CAUTION

Mount the base station so that neither the display, emergency stop switch, nor the signal light is exposed to direct sunlight. The display may otherwise be unreadable, or the status of the emergency stop switch could be falsely interpreted.

Montez la base de telle sorte que ni l'écran, ni l'interrupteur d'arrêt d'urgence, ni la lampe témoin ne soient exposés à la lumière directe du soleil. Sinon l'affichage peut être illisible ou l'état de l'interrupteur d'arrêt d'urgence peut être mal interprété.

9.2 Check List

9.2.1 Check Contents of Delivery

Ensure that the contents of the delivery are complete and intact. See chapter 1.3 Contents of Delivery for more information.

Do not use damaged components. These could disrupt or damage your system.

If damaged components are found in the delivery, please contact our customer service.

9.2.2 Checking Space Requirement

Using the drill template, check the required space. The HGW and the BWH are marked on the template in a 1:1 ratio. The drill template is available for download on our website.

9.2.3 Determining Antennae Positions

CAUTION

To ensure signal range, the position of the base station must be measured and defined by trained personnel.

Pour garantir la portée du signal, la position de la station de base doit être mesurée et définie par un personnel qualifié.

9.2.4 Mounting the Base Station

Use the drill template, which can be attached to the desired position, to simplify determining the location of the drill holes. See chapter 9.3. Punch bore holes through the template, remove the template and drill the holes at the resulting markings. Mount the base station.

9.2.5 Placing the Installation Number

Place a unique, 2-digit number on the installation over which the handheld operating panel should be coupled with the machine.
This number can only occur once in the machine park. Otherwise, the operating panel could be unintentionally coupled with a non-participating machine and lead to confusion.
Ensure the number is placed visibly.

Note the unique number assignment in the system plan.

9.3 Mounting Help

For mounting, a drill template is available for download. In addition to the boreholes, it also contains the necessary space for the mounted HGW around the base station.

9.4 Wiring

The base station BWH 001 is connected via the M12 connector.
The connector socket is documented in chapter 6.1.1.

1) Turn off the current supply.
2) Install the wiring. Ensure the strands are equipped with ferrules and the shielding is connected (see 9.4.1).
3) Turn the supply on again.

For the dimensions of the wiring, the power loss / voltage drop in the supply lines must be taken into consideration. The voltage to the base station must be within the specified limits.

9.4.1 Ground/Shielding

The base station is grounded via the cable shielding. It is important to create a low-ohm ground connection, only then can error-free operation be guaranteed.
It is recommended that the shielding be mounted at the entry point of the control cabinet housing. Noise can then be deflected from the electronic components before reaching the module.

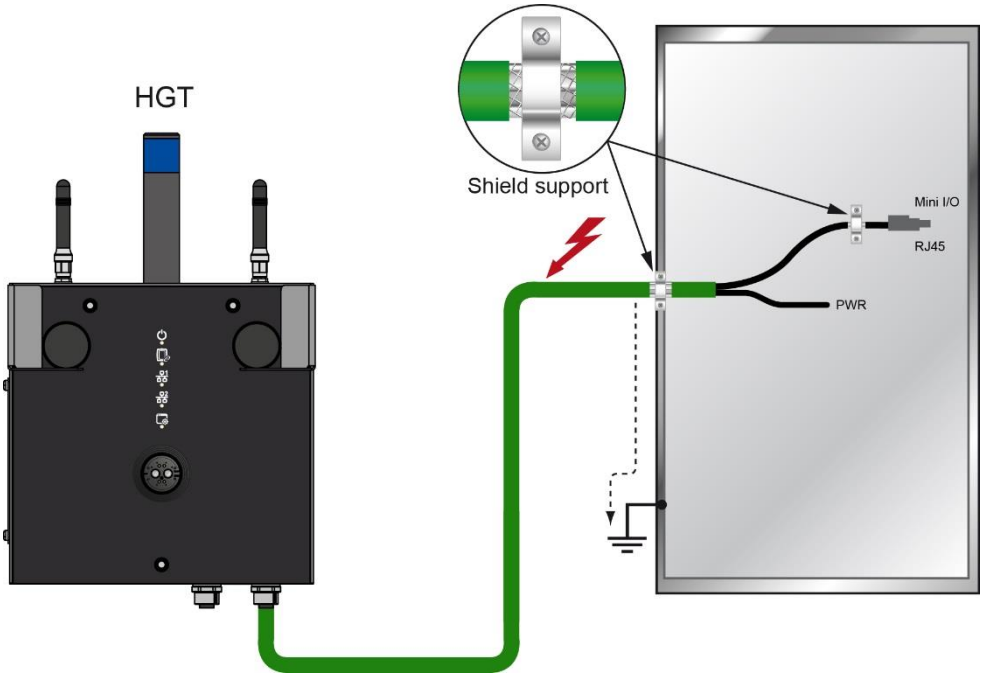

9.4.2 ESD Protection

Before any device is connected to, or disconnected from the terminal, the potential should be equalized (by touching the control cabinet or ground terminal). Electrostatic loads (through clothing and shoes) can be thereby dissipated.

Avant de connecter ou de déconnecter un appareil à la borne, le potentiel doit être égalisé (en touchant l'armoire électrique ou la borne de terre). Les charges électrostatiques (à travers les vêtements et les chaussures) peuvent ainsi être éliminées.

10 Operation/Start-up

For safety reasons, the HGW is set to a special “delivery mode” when transported. This mode is automatically deactivated with the initial charging process.

The operating system for the base station is stored on the microSD Card, which during operation, cannot be removed.

10.1 Standard Configuration

Ethernet

Ethernet	X1	IP: 10.10.150.1	Subnet mask: 255.0.0.0

WLAN

At the time of delivery, the panel is configured as an access point and the network is accessible with the following parameters.

The serial number is contained in the network name (SSID). This can be found on the reverse side of the panel on the product label.

Example:

Serial number HGW1033-3:	12345678
SSID 2.4 GHz network:	SN12345678_SIG_11
SSID 5 GHz network:	SN12345678_SIG_10

Parameters	Default value
SSID 2.4 GHz network	SN<serial number>_SIG_11
SSID 5 GHz network	SN<serial number>_SIG_10
Password for both networks.	12345678
IP address / mask 2.4 GHz network	192.168.2.1 / 255.255.255.0
IP address / mask 5 GHz network	192.168.1.1 / 255.255.255.0

Problems can arise if a control is connected to an IP network, which contains modules that do not run on a SIGMATEK operating system. With such devices, Ethernet packets could be sent to the control with such a high frequency (i.e. broadcasts), that the high interrupt load could cause a real-time runtime error or runtime error. By configuring the packet filter (Firewall or Router) accordingly however, it is possible to connect a network with SIGMATEK hardware to a third-party network without triggering the error mentioned above.

Des problèmes peuvent survenir si un automate est connecté à un réseau IP contenant des modules qui ne fonctionnent pas sous un système d'exploitation SIGMATEK. Avec de tels dispositifs, les paquets Ethernet peuvent être envoyés à l’automate avec une fréquence tellement élevée (càd. diffusion), que les interruptions ainsi générées peuvent provoquer une erreur d'exécution. En configurant d’une façon appropriée le filtre de paquets (pare-feu ou un routeur) il est toutefois possible de connecter un réseau avec le matériel SIGMATEK à un réseau tiers sans déclencher l'erreur mentionnée ci-dessus.

10.1.1 Standard Application

In delivery condition, a minimal application is stored in the base station that allows loading an HGW 1033-3.

10.2 WLAN Channels and Settings

The WLAN channels and settings supported by the hardware and software can be found in the "WLAN Configuration" document. Only the channels and settings released there may be used.

The information contained in the document "WLAN Configuration" does not release the user from the obligation to observe national standards and laws as well as special regional regulations.

10.3 Configuration

The base station can be configured in LASAL via the USB-C interface, Ethernet or WLAN.

NEVER operate the panel without antennae. This can result in damage to the device.

The actual time-out configured in the SCP must be included in your risk assessment!

10.4 Testing the Operating Area

CAUTION

Test the function in the operating area. Ensure the operating panel can control the machine throughout the entire operating area. Perform this test using an HGW.

Tester la fonction dans la zone d'utilisation. S'assurer que le panneau de commande peut commander la machine dans toute la zone de travail. Effectuer ce test à l'aide d'une HGW.

10.5 Operation

The BWH 001 base station needs no special handling. It is ready for operation as soon as power is supplied and the application is started.
The process for coupling the operating panel can be found in chapter 10.5.1
The meaning of the LED displays is described in chapter 6.4.
The IP addresses are configured using LASAL.
The BWH is coupled via the operating panel.

Please note that if in a handheld operating panel mounted in the BWH, certain functions may be limited or it may have no function at all (e.g. key switch, confirmation switch...).

10.5.1 Coupling the Operating Panel

To couple the operating panel, a functioning WLAN connection is required.

As soon as the operator is located in the operational range of the base station or machine with the HGW, the operating panel can be coupled with the machine. For this purpose, see the documentation of the corresponding class.

If the operating panel has Safety functions and the base station is coupled with a safety-related control, it is indicated via the activated 7-segment display which shows the machine number.

WARNING

To avoid faulty operation, an active operating panel can only be mounted in the corresponding base station.

Pour éviter un fonctionnement défectueux, un panneau de commande actif ne peut être monté que sur la station de base correspondante.

10.5.2 Decoupling the Operating Panel

The operating device can be separated from the machine in several ways.

1. Separating the Safety functions only: In this case, the operating panel can be further used as a control unit without Safety.
2. Decoupling the operating panel from the machine: The panel has no operating function and is therewith not a part of the system control unit.
3. Deactivating the WLAN connection: In this case, the panel is used offline only and has no connection to the machine.

To avoid an emergency stop, perform a controlled decoupling of the HGW.

11 Help with Disruptions/Troubleshooting

Problem	Cause	Solution
BWH not functioning	Current supply unavailable	Check whether the base station is powered.
HGW functional range limited	HGW link not available (see LED on BWH)	Couple the operating panel to the machine
Signal disruption displayed	No wireless connection	Check the signal range and if necessary, have it restored by a technician.
The HGW is not charged.	Device not in RUN mode	Start the application, if necessary, check for errors.
	No application	Load an application into the device with the BWH hardware class.
	Contact problems	Check the charging connector on both sides and clean them if necessary

12 Maintenance

During maintenance as well as servicing, observe the safety instructions from chapter 2.

12.1 Cleaning and Disinfecting the Device Surface

The surface of the BWH can only be cleaned with a damp, soft cloth. To dampen the cloth, a mild cleaning solution such as antistatic foam cleaner is recommended. To avoid fluids/cleaning solutions from getting into the sockets or housing, the BWH must not be directly sprayed. To clean, no erosive cleaning solutions, chemicals, abrasive cleansers or hard objects that can scratch or damage the base station may be used. The use of steam jets or compressed air is prohibited.

For disinfection, surface disinfectants on alcohol basis, which do not contain refatting agents, can be used.

WARNING

If the device is contaminated with toxic or erosive chemicals, it must be carefully cleaned as quickly as possible to prevent personal injury and machine damage!

Si l'appareil est contaminé par des produits chimiques toxiques ou érosifs, il doit être nettoyé avec soin le plus rapidement possible afin d'éviter des blessures corporelles et des dommages matériels !

After cleaning, ensure the base station is dry. Moisture can lead to leakage currents and impair the device’s function or destroy it.

Après le nettoyage, assurez-vous que la base est sèche. L'humidité peut entraîner des courants de fuite et nuire au fonctionnement de l'appareil ou le détruire.

12.2 Maintenance

This product was constructed for low-maintenance operation.

12.2.1 Exchanging the microSD Card

The base station is a sensitive electronic device. When opening the base station, as well as when exchanging the microSD card, note that you are coming into contact with ESD sensitive areas of the device.

The applicable ESD measures must be taken!

La station de base est un appareil électronique sensible. Lors de l'ouverture de la base et du remplacement de la carte microSD, notez que vous êtes en contact avec des zones sensibles ESD de l'appareil.

Les mesures d'ESD applicables doivent être prises !

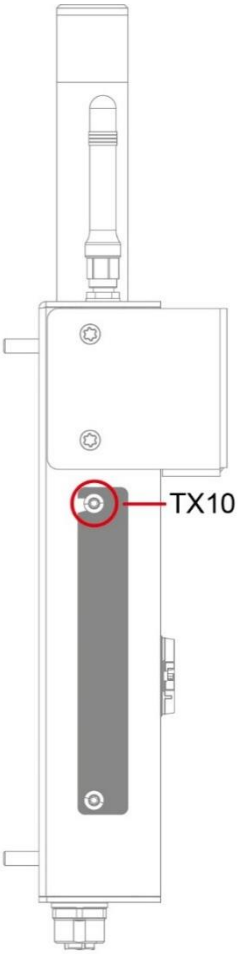

1. Ensure that an ESD-compliant working method is followed (ESD armband, ESD clothing).
2. Remove the operating panel from the base station.
3. Disconnect the base station from the supply and wait 15 minutes.
4. Loosen the upper screw located on the side of the base station cover (Torx10).

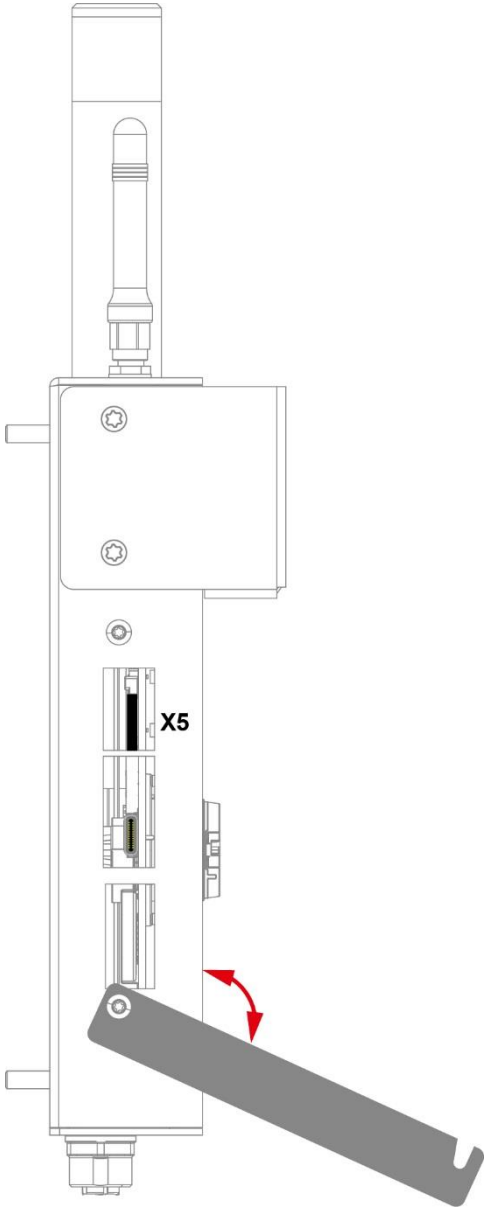

5. Rotate the cover as shown.
6. If a microSD card is installed, press it approximately 2 mm into the device and release it. The card latch thereby disengages and the microSD card is ejected approximately 5 mm outward from the cardholder.

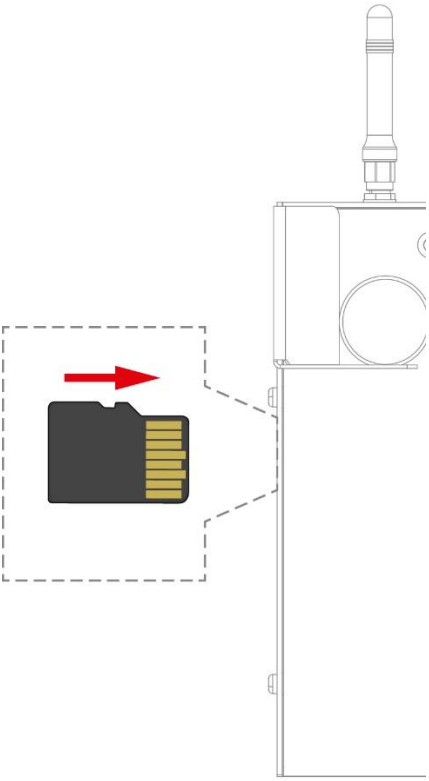

7. Using the fingernails, pull the microSD card from the cardholder. Do not use and pointed or electrically conductive objects to remove the card.
8. Insert the new microSD card with the correct polarity.
9. Press the card into the holder and release it. The card is now mounted.
10. Turn the BWH on.
11. Mount the operating panel back into the base station.

The microSD card can be ordered as an accessory, see chapter 14.1 microSD Card.

12.3 Repair

When sent for repair, the panel should be transported in the original packaging when possible. Otherwise, packaging should be selected that sufficiently protects the product from external mechanical influences. Such as cardboard filled with air cushioning.

In the event of a defect/repair, send the panel with a detailed error description to the address listed at the beginning of this document.

13 Disposal

Should you need to dispose of the device, the national electronic scrap regulation must be observed.

The panel cannot be discarded with domestic waste.

14 Accessories

14.1 microSD Card

Size	Order number
512 MB	12-630-055
1 GB	12-630-105

14.2 Cable

See documentation for operating device connection cables.

14.3 Antennae

Description	Order number
HGW 1033-E2	12-246-1033-E2

14.4 Configuring Safety Components

WARNING

The actual time-out configured in the SCP 111 must be included in your risk assessment!

Le délai d'attente réel configuré dans le SCP 111 doit être inclus dans votre évaluation des risques !

If the panel goes into safe mode, the application must deactivate the emergency stop light.

Si le panneau passe en mode de sécurité, l'application doit désactiver le signal lumineux d'arrêt d'urgence.

Documentation Changes

Change date	Affected page(s)	Chapter	Note
02.10.2018	1	Description text	Introductory text extended
14.12.2018	Document		Revision
25.01.2019	31	7 Status and Error Messages	added
06.02.2019	54	13 Disposal	Chapter changed
19.08.2019	16	4.1 Performance Data	Ethernet interface available
05.03.2020	17	4.3 Environmental Conditions	Humidity changed to 95% and Free fall (with packaging) to 1000 mm Free fall (with rough handling) removed
16.07.2020		10.2 WLAN Channels and Settings	Chapter added
04.08.2020		Complete document	Safety passages removed
28.08.2020	25	6.4.1 Front LEDs	Graphic table adapted
08.09.2020	15 16	4.2 Electrical Requirements 4.4.1 WLAN 2.4 GHz 4.4.2 WLAN 5 GHz	Protection class added Standards added Standards added
27.11.2020	16 17	4.4.1 WLAN 2,4 GHz 4.4.2 WLAN 5 GHz 4.4.3 Antennae	Channels changed Channels changed Info text changed
18.08.2022	22	6.3.1 X4 Power/Data	Pinning corrected, additional information added