DC 062

S-DIAS Axis Module

Instruction Manual

Date of creation: 13.01.2015 | Version date: 05.12.2023 | Article number: 20-014-062-E

Publisher: SIGMATEK GmbH & Co KG
A-5112 Lamprechtshausen
Tel.: +43/6274/4321
Fax : +43/6274/4321-18
Email: office@sigmatek.at
WWW.SIGMATEK-AUTOMATION.COM

Translation of the Original Instruction

S-DIAS Axis Module DC 062(-X)

with 1 motor output stage

1 incremental encoder input

1 holding brake

The S-DIAS DC 062(-X) axis module is used to control a brushless DC motor with a 48-Volt supply voltage and phase current of up to 6 A. An incremental encoder input is available for position feedback. A 24 V output for connecting a holding brake is provided. External Regen brake can also be connected.

DC 062-X: main board and S-DIAS connectors coated in Purocoat (Certonal)

Contents

1 Introduction

1.1 Target Group/Purpose of this Operating Manual

This operating manual contains all information required for the operation of the product.

This operating manual is intended for:

- Project planners
- Technicians
- Commissioning engineers
- Machine operators
- Maintenance/test technicians

General knowledge of automation technology is required.

Further help and training information, as well as the appropriate accessories can be found on our website www.sigmatek-automation.com.

Our support team is happily available to answer your questions.
Please see our website for our hotline number and business hours.

1.2 Important Reference Documentation

- Safety System Handbook

This and additional documents can be downloaded from our website or obtained through support.

1.3 Contents of Delivery

1x DC 062(-X)

2 Basic Safety Guidelines

2.1 Symbols Used

The following symbols are used in the operator documentation for warning and danger messages, as well as informational notes:

DANGER

Danger indicates that death or serious injury **will occur**, if the specified measures are not taken.

⇨ To avoid death or serious injuries, observe all guidelines.

Danger indique une situation dangereuse qui, faute de prendre les mesures adéquates, **entraînera** des blessures graves, voire mortelles.

⇨ Respectez toutes les consignes pour éviter des blessures graves, voire mortelles.

WARNING

Warning indicates that death or serious injury **can** occur, if the specified measures are not taken.

⇨ To avoid death or serious injuries, observe all guidelines.

Avertissement d'une situation dangereuse qui, faute de prendre les mesures adéquates, **entraînera** des blessures graves, voire mortelles.

⇨ Respectez toutes les consignes pour éviter des blessures graves, voire mortelles.

CAUTION

Caution indicates that moderate to slight injury **can** occur, if the specified measures are not taken.

⇨ To avoid moderate to slight injuries, observe all guidelines.

Attention indique une situation dangereuse qui, faute de prendre les mesures adéquates, **peut** entraîner des blessures assez graves ou légères.

⇨ Respectez toutes les consignes pour éviter des blessures graves, voire mortelles.

DANGER

- Electrical voltage
- Tension électrique

CAUTION

Danger for ESD-sensitive components.

Les signes de danger pour les composants sensibles aux décharges électrostatiques.

INFORMATION

Information

⇨ Provides important information on the product, handling or relevant sections of the documentation, which require attention.

2.2 Disclaimer

INFORMATION

The contents of this operating manual were prepared with the greatest care. However, deviations cannot be ruled out. This operating manual is regularly checked and required corrections are included in the subsequent versions. The machine manufacturer is responsible for the proper assembly, as well as device configuration. The machine operator is responsible for safe handling, as well as proper operation.

The current operating manual can be found on our website. If necessary, contact our support.

Subject to technical changes, which improve the performance of the devices. The following operating manual is purely a product description. It does not guarantee properties under the warranty.

Please thoroughly read the corresponding documents and this operating manual before handling a product.

SIGMATEK GmbH & Co KG is not liable for damages caused through, non-compliance with these instructions or applicable regulations.

2.3 General Safety Directives

The Safety Directives in the other sections of this operating manual must be observed. These instructions are visually emphasized by symbols.

INFORMATION

According to EU Directives, the operating manual is a component of a product.

This operating manual must therefore be accessible in the vicinity of the machine since it contains important instructions.

This operating manual should be included in the sale, rental or transfer of the product, or its online availability indicated.

Regarding the requirements for Safety and health connected to the use of machines, the manufacturer must perform a risk assessment in accordance with machine directives 2006/42/EG before introducing a machine to the market.

Operate the unit with devices and accessories approved by SIGMATEK only.

CAUTION

Handle the device with care and do not drop or let fall.

Prevent foreign bodies and fluids from entering the device.

The device must not be opened!

Manipulez l’appareil avec précaution et ne le laissez pas tomber.

Empêchez les corps étrangers et les liquides de pénétrer dans l’appareil.

L’appareil ne doit pas être ouvert!

If the device does not function as intended or has damage that could pose a danger, it must be replaced!

En cas de fonctionnement non conforme ou de dommages pouvant entraîner des risques, l'appareil doit être remplacé!

The module complies with EN 61131-2.

In combination with a facility, the system integrator must comply with EN 60204-1 standards.

For your own safety and that of others, compliance with the environmental conditions is essential.

Le module est conforme à la norme EN 61131-2.

En combinaison avec une équipement, l’intégrateur de système doit respecter la norme EN 60204-1.

Pour votre propre sécurité et celle des autres, le respect des conditions environnementales est essential.

2.4 Designated Use

The Safety functions implemented in the product are designed for use with safety applications in a SIGMATEK control and meet the required conditions for safe operation according to SIL 3, HFT 1 n compliance with EN IEC 62061 and according to PL e, Kat. 4 in compliance with EN ISO 13849-1.

CAUTION

The instructions contained in this operating manual must be followed.

For error-free operation, proper transport and storage are essential.

Installation, mounting, programming, initial start-up, operation, maintenance and decommissioning can only be performed by qualified personnel.

Qualified personnel in this context are people, who have completed training or have trained under supervision of qualified personnel and have been authorized to operate and maintain safety-related equipment, systems and facilities in compliance with the strict directives and standards of safety technology (Functional Safety).

Les instructions contenues dans ce manuel technique doivent être suivies.

Pour un fonctionnement sans erreur, le transport et le stockage appropriés sont essentiels.

L'installation, le montage, la programmation, la mise en service initiale, l'exploitation, la maintenance et la mise hors service ne peuvent être effectués que par une personne qualifiée.

Dans ce contexte, on entend par personnel qualifié les personnes qui ont suivi une formation ou qui ont été formées sous la supervision d'un personnel qualifié et qui ont été autorisées à utiliser et à entretenir l'équipement, les systèmes et les installations de sécurité conformément aux directives et aux normes strictes de la technique de sécurité (Sécurité fonctionnelle).

For your own safety and that of others, the product should be used for their designated purpose only.

Correct EMC installation is also included under designated use.

Pour votre propre sécurité et celle des autres, le produit ne doivent être utilisés qu'à des fins prévues.

Une installation CEM correcte est également incluse dans l'utilisation

prévue.

Non-designated use consists of:

- any changes made to the module or the use of damaged modules.
- use of the module inconsistent with the technical margins described in this operating manual or the specifications defined in the technical data.

L'utilisation non désignée consiste en:

- toute modification apportée au module ou l'utilisation des modules endommagés.
- utilisation du module non conforme aux marges techniques décrites dans ce manuel ou aux spécifications définies dans les données techniques.

Before delivering the module, the machine manufacturer must ensure that it is in “delivery condition”. See chapter Transport/Storage for more information.

Avant de livrer le module, le constructeur de la machine doit s'assurer qu'il est en "état de livraison". Voir le chapitre Transport/Storage pour plus d’informations.

2.5 Software/Training

The application is created with the software LASAL CLASS 2 and LASAL SCREEN Editor, the Safety application is created using the SAFETYDesigner. Basic information on Safety (Functional Safety) can be found in the Safety System Handbook.

Training for the LASAL development environment, with which the product can be configured, is provided. Information on our training schedule can be found on our website.

3 IT Security

S-DIAS safety modules were developed for integration into a network protected against unauthorized access. For example, the following dangers can affect the network:

- Unauthorized access
- Data manipulation
- and many other IT security violations

It is the responsibility of the operator to protect the safe connection between S-DIAS modules against unauthorized access. The following measures, for example, are suitable for this:

- Firewalls
- Password-protected user accounts
- Data encryption
- and much more

4 Standards and Directives

4.1 Residual Risks

CAUTION

The following residual risks for the product must be included in the system integrator's risk assessment:

- Release of non-environmentally safe substances, emissions and unusual temperatures
- Possible effects of information technology devices

Les risques résiduels suivants pour le produit doivent être inclus dans l'évaluation des risques de l'intégrateur de système:

- Libération de substances non respectueuses de l'environnement, émissions et températures inhabituelles
- Effets possibles des dispositifs de technologie de l'information

4.2 Safety of the Machine or Equipment

INFORMATION

Observe all on-site rules and regulations for accident prevention and occupational safety.

4.3 Directives

The product was constructed in compliance with the following European Union directives and tested for conformity.

4.3.1 Functional Safety Standards

EN IEC 62061 - Safety of machinery - Functional safety of safety-related control systems
EN ISO 13849-1 - Safety of machinery — Safety-related parts of control systems — Part 1: General principles for design
EN ISO 13849-2 - Safety of machinery — Safety-related parts of control systems — Part 2: Validation

4.3.2 EU Conformity Declaration

EU Declaration of Conformity

The product DC 062(-X) conforms to the following European directives:

- **2006/42/EG** Machine Directive
- **2014/30/EU** Electromagnetic Compatibility (EMC Directive)
- **2011/65/EU** “Restricted use of certain hazardous substances in electrical and electronic equipment” (RoHS Directive)

The EU Conformity Declarations are provided on the SIGMATEK website. See Products/Downloads or use the search function and the keyword “EU Declaration of Conformity”.

4.4 Safety-Relevant Parameters

DC 062(-X)	Safety Parameters	Safety Levels
Safety function STO	PFH_D = 3.92E-10 (1/h) $MTTF_D$ = 6524 years DC = 96.09 % SFF = 99.89 %	SIL 3 according to EN IEC 62061 PL e / Cat. 4 according to EN ISO 13849

4.1 Compatibility

INFORMATION

Compatibility

For compatibility of the S-DIAS Safety modules, see section "Compatibility of S-DIAS Safety Modules" in the system handbook.

5 Type Plate

HW: X.XX
SW: XX.XX.XXX
Safety Version: SXX.XX.XX

Serial No.

SIGMATEK GMBH & CO KG
Sigmatekstrasse 1 A-5112 LAMPRECHTSHAUSEN

Article Number Product Name Short Name

Exemplary nameplate (symbol image)

HW: 1.00
SW: 01.00.000
Safety Version: S01.00.00

12345678

SIGMATEK GMBH & CO KG
Sigmatekstrasse 1 A-5112 LAMPRECHTSHAUSEN

12-246-133-3 Handbediengerät Wireless HGW 1033-3

HW: Hardware version
SW: Software version

6 Technical Data

6.1 Motor Driver Specifications

Type	brushless DC
Operating voltage	+24-55 V
Maximum continuous current	6 A
Maximum peak current (10 sec)	15 A
Controller frequency	16 kHz
PWM frequency	16 kHz
Overload protection	short circuit cutoff temperature monitor I^2T monitor over and under voltage monitor

6.2 Incremental Encoder Specifications

Number	1
Input signals [1)]	Incremental encoder signals RS422 (A, /A, B, /B, R, /R) RS422 signal (120 Ω termination, integrated in module)
	Incremental encoder signals TTL (A, B, R) TTL-level (1200 Ω Pull-Up, integrated in module)
Input frequency	maximum 125 kHz
Counter frequency	maximum 500 kHz
Signal analysis	4x
Counter resolution	16 bits
Encoder power supply	+5 V/0.2 A short-circuit proof

[1)] The software switch-over from RS422 to TTL incremental encoder signals is carried out via bit 5 in the motor parameter A-ACME (bit 5 = 0 **->** RS422 [default]; bit 5 = 1 **->** TTL)

INFORMATION

Commutation search

The DC 062(-X) with incremental encoder performs a commutation search during the enable process, which can take several seconds. If the motor has a brake, this can lead to problems if this does not allow sufficient clearance for the increment change required during the commutation search.

6.3 Enable Inputs Specifications

Number	2	
Input voltage	+24 V DC	
Input voltage range	+18-30 V DC	
Signal level	low: < 5 V	high: > 15 V
Switching threshold	typically +11 V	
Input current	3 mA at +24 V DC	
Input delay	typically 0.5 ms	
Output test signal Control	maximum 1.5 ms	

6.4 Holding Brake Specifications

Output voltage	+24 V DC
Maximum continuous current	500 mA
Short-circuit protection	yes
Maximum switch-off energy (inductive load)	50 mJ

6.5 Regen Brake Specifications

Type	external power resistor
Output	GND switching
Maximum current	10 A [1)]
Lowest possible resistance	6 Ω [2)]
Short-circuit protection	yes
Threshold regen braking on/off	60 V/55 V

[1)] Regen braking must be dimensioned according to the application. For most applications, a 10 Ω/50 W resistor is sufficient. If multiple DC 062(-X)s are driven with one intermediate circuit supply, it is possible to equip only one module with regen braking. The recommended regen resistor (15 Ω /100 W) is available at SIGMATEK under the article number 20-014-061-Z1.

[2)] The resistor must be dimensioned with regard to its maximum power dissipation in accordance with the braking power occurring in the application. However, the permissible short-term power must be at least $P=U^2/R$, i.e. $60^2/R$.

WARNING

Hot surface warning!

Physical contact poses a burn hazard!

During operation, the surface of the brake resistor can become very hot and remain so for some time after operation.

Avertissement de surface chaude

Le contact physique pose un risque de brûlure

Pendant le fonctionnement, la surface de la résistance de freinage peut devenir très chaude et le rester pendant un certain temps après le fonctionnement.

Avoid physical contact with the surface of the brake resistor, and for a significant time after operation as well.

Eviter tout contact physique avec la surface de la résistance de freinage, ainsi que pendant une longue période après le fonctionnement.

6.6 Electrical Requirements

Power supply +24 V	+18-30 V DC, Class 2 [1]	
Current consumption of the +24 V supply	load-dependent (holding brake)	
Supply voltage motor	+24-55 V DC [2]	
Switching threshold for motor voltage monitor	minimum 18 V	maximum 65 V
Current consumption of motor supply	load-dependent (motor)	
Voltage supply from S-DIAS bus	+24 V DC	
Current consumption on the S-DIAS bus (+24 V supply)	typically 70 mA	maximum 80 mA

INFORMATION

[1] For USA and Canada:

The supply (X4) must be limited to:
a) max. 5 A at voltages from 0-20 V DC, or
b) 100 W at voltages from 20-60 V DC

The limiting component (e.g. transformer, power supply or fuse) must be certified by an NRTL (Nationally Recognized Testing Laboratory).

[2] The motor supply (X2) must be connected with an intermediate circuit capacitance appropriate for the application (at least 2000 µF/100 V). Attention must be paid to short cables and appropriate cable cross-sections.

(maximum 15 cm between module and capacitor / 1.5 mm²)

DC Motor Braking

When applying the brake in a servo motor, a generative process can occur whereby the kinetic energy of the motor is converted into electrical energy. The energy of the motor is thereby fed back into the supply of the servo motor output stage; this then increases the supply voltage. It should be noted that a regenerative voltage of 65 V at the motor supply connection is not exceeded! The external capacity of the motor supply is may be needed. If the capacitors in the power supply are insufficient, a regen resistor, which converts the excess energy into heat must be connected to the servo motor output stage. When selecting the power supply, it is important to ensure that it is appropriately feedback-resistant up to the maximum regenerative voltage that occurs.

Use wires only that are allowed for at least 75 °C!

There is no motor thermostat evaluation in the motor output stage.

Incorrectly set parameter or incorrect wiring can lead to destruction of the motor. In particular, motor currents and the I2T settings (A-I2TT, A-I2TERR) must be monitored, which can be parameterized in the DIAS-Drive Editor via the LASAL Class 2 tool.

Only motors in a star connection can be used.

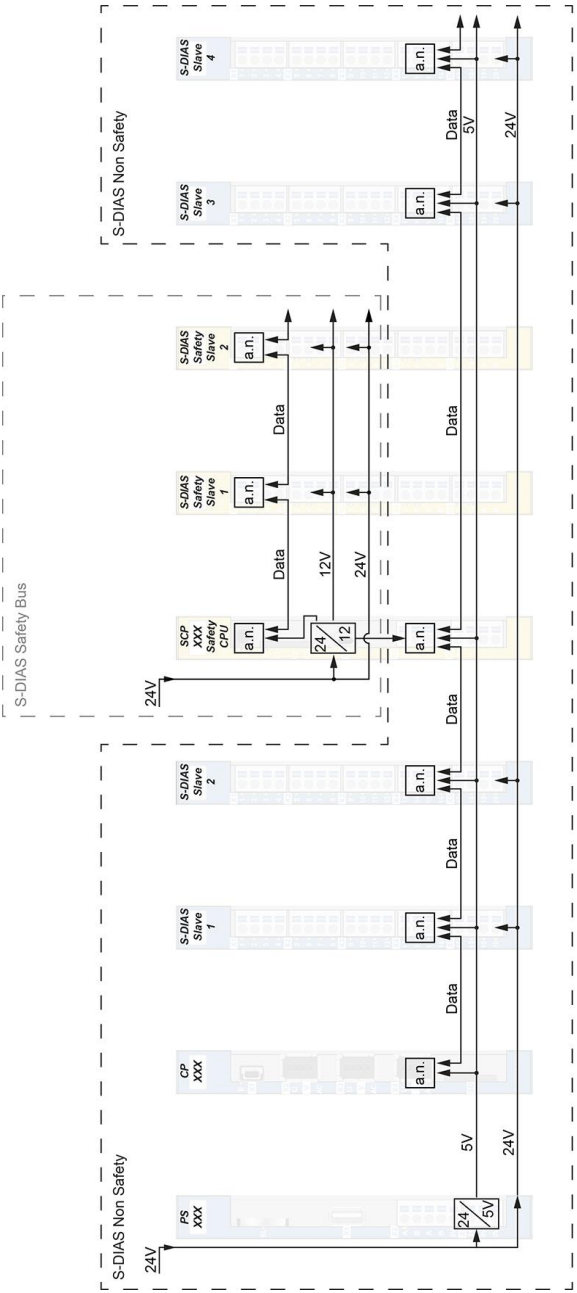

Wiring S-DIAS Safety in S-DIAS System

- each S-DIAS module is an active module (active node)
- Safety CPU is connected to the S-DIAS bus (incl. +5 V supply)
- Safety bus is independent and separated from the S-DIAS bus

6.7 Miscellaneous

Article number	20-014-062 20-014-062-X (Printed circuit board with protective lacquer)
Standard	UL 508C (E336350)
Approvals	$_{C}UL_{US}$, CE, TÜV-Austria EG-type-examined
Mission time	20 years
Reaction time	see chapter "Reaction and Turn-off Time" in the Safety System Handbook

6.8 Environmental Conditions

Storage temperature	-20 ... +85 °C	
Environmental temperature	0 ... +50 °C	
Humidity	0-95 %, non-condensing	
Installation altitude above sea level	0-2000 m without derating > 2000 m with derating of the maximum environmental temperature by 0.5 °C per 100 m	
Operating conditions	Pollution degree 2	
Noise emissions	≤ 70 dB	
EMC resistance	in accordance with EN 61000-6-7:2015 (Generic standards - Immunity requirements for equipment intended to perform functions in safety-related systems (functional safety) at industrial locations) in accordance with EN 61000-6-2:2007 (industrial area) (increased requirements in accordance with EN IEC 62061) Additionally tested according to EN 61800-5-2:2017 (Generic Standards for Electrical Power Drive Systems with Adjustable Speed Part 5-2: Safety Requirements – Functional Safety)	
EMC noise generation	in accordance with EN 61000-6-4:2007 (industrial area)	
Vibration resistance	EN 60068-2-6	3.5 mm from 5-8.4 Hz 1 g from 8.4-150 Hz
Shock resistance	EN 60068-2-27	15 g
Protection type	EN 60529	IP20

7 Mechanical Dimensions

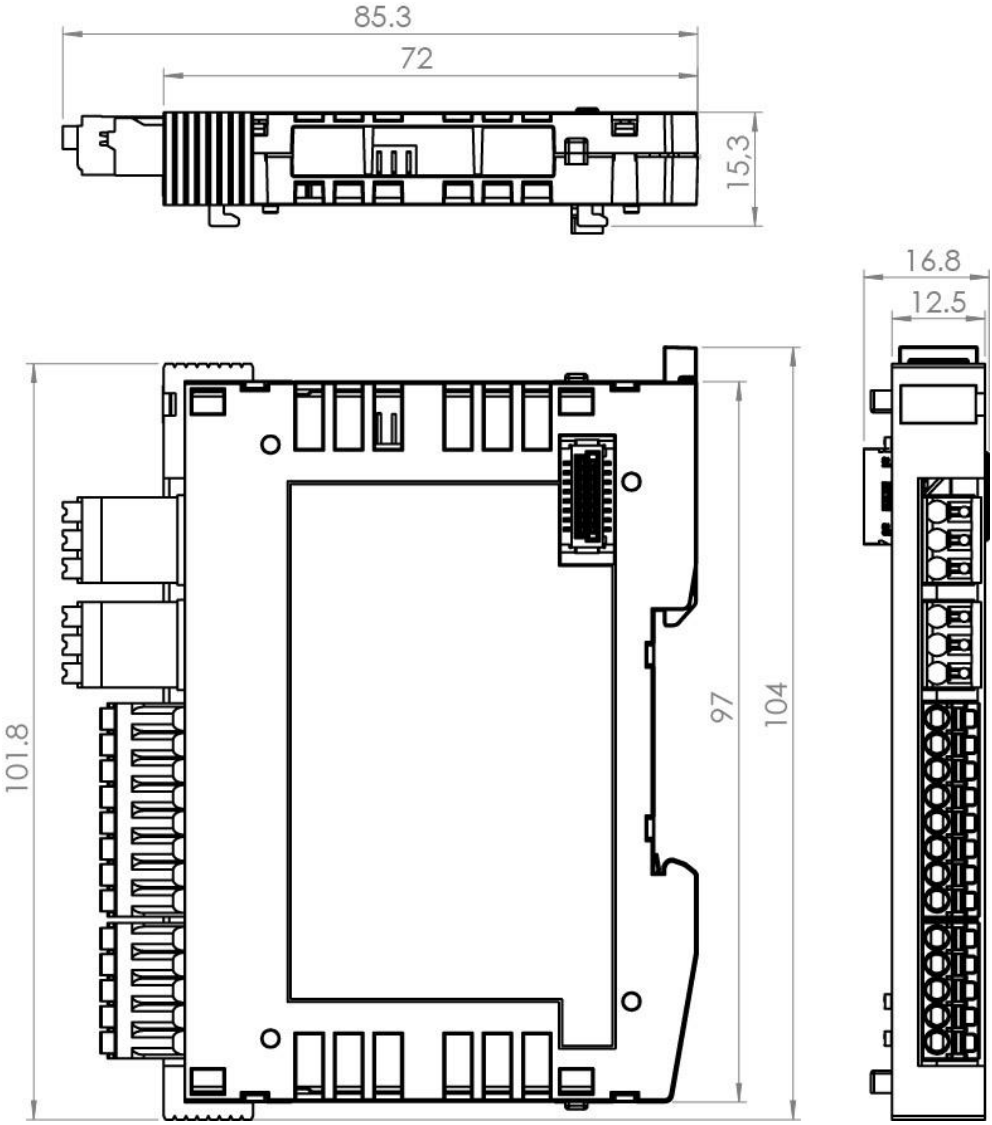

8 Connector Layout

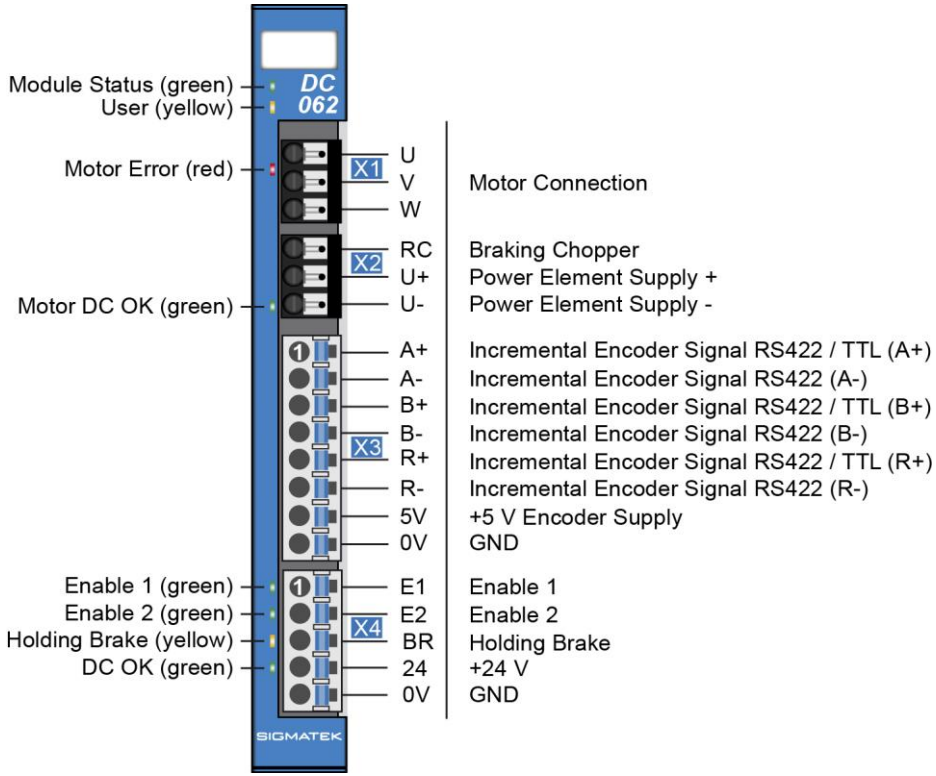

8.1 Status LEDs

Module Status	green	ON	module active
		OFF	no supply available
		BLINKING (5 Hz)	no communication
User	yellow	ON	can be set from the application (e.g. the module LED can be set to blinking through the visualization so that the module is easily found in the control cabinet)
		OFF	
		BLINKING (2 Hz)	
		BLINKING (4 Hz)	
Motor Error	red	BLINKS	motor output stage error
		OFF	normal operation
Motor DC OK	green	OFF	no motor supply voltage
		BLINKS	power applied, but motor inactive
		ON	power applied and motor active
Enable 1	green	ON	enable 1 high
		OFF	enable 1 low
Enable 2	green	ON	enable 2 high
		OFF	enable 2 low
Holding brake	yellow	ON	output active
		OFF	output inactive
DC OK	green	ON	+24 V DC supply OK
		OFF	+24 V DC supply missing or voltage too low
		BLINKS	+24 V DC voltage supply too high

8.2 Applicable Connectors

X1, X2: Weidmüller socket connector with spring terminal (included in delivery)
X3, X4: Phoenix connectors with spring terminals (included in delivery)

The spring terminals are suitable connecting ultrasonically compacted (ultrasonically welded) strands.

Connections Weidmüller Plug Connectors:

Stripping length/Sleeve length:	9 mm
Plug-in direction:	parallel to conductor axis or to PCB
Conductor cross section, rigid: H05(07) V-U	0.14-1.5 mm^2
Conductor cross section, flexible: H05(07) V-K	0.14-1.5 mm^2
Conductor cross section, ultrasonically compacted	0.14-1.5 mm^2
Conductor cross section AWG/kcmil:	26-16
Conductor cross section flexible, with ferrule without plastic sleeve (DIN 46228-1):	0.25-1.5 mm^2
Conductor cross section flexible, with ferrule with plastic sleeve (DIN 46228-4):	0.25-1 mm^2 (ground for reducing d2 of the ferrule)

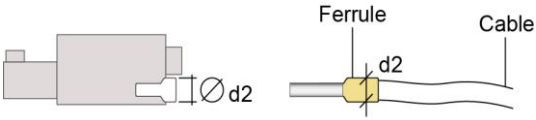

d2 = max. 3.5 mm

Connections Phoenix Plug Connectors:

Stripping length/Sleeve length:	10 mm
Plug-in direction:	parallel to conductor axis or to PCB
Conductor cross section, rigid:	0.2-1.5 mm^2
Conductor cross section, flexible:	0.2-1.5 mm^2
Conductor cross section, ultrasonically compacted	0.2-1.5 mm^2
Conductor cross section AWG/kcmil:	24-16
Conductor cross section flexible, with ferrule without plastic sleeve:	0.25-1.5 mm^2
Conductor cross section flexible, with ferrule with plastic sleeve:	0.25-0.75 mm^2 (ground for reducing d2 of the ferrule)

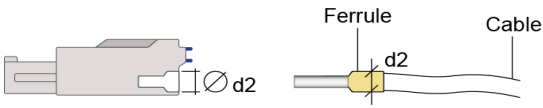

d2 = max. 2.8 mm

CAUTION

The S-DIAS module CANNOT be connected or disconnected while voltage is applied!

Le module S-Dias NE PEUT PAS être inséré ou retiré sous tension.

8.3 Label Field

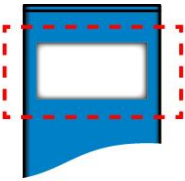

Manufacturer	Weidmüller
Type	MF 10/5 CABUR MC NE WS
Weidmüller article number	1854510000
Compatible printer	Weidmüller
Type	Printjet Advanced 230V
Weidmüller article number	1324380000

9 Wiring

9.1 Wiring Example

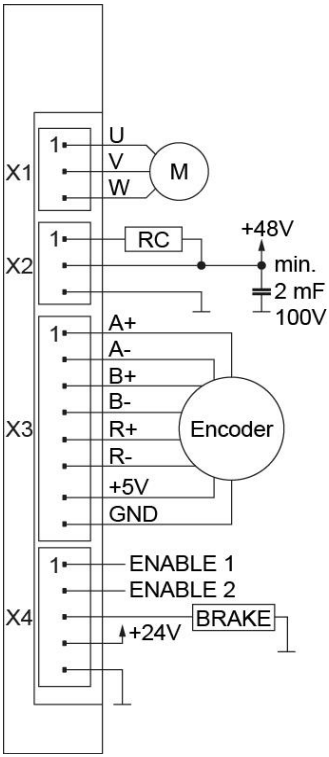

INFORMATION

Use wires only that are allowed for at least 75 °C!

9.1.1 Wiring SM Motors with Tyco Connectors

With Holding Brake	Length
M062E-10-1-015-2-0	1.5 m
M062E-10-1-030-2-0	3.0 m
M062E-10-1-050-2-0	5.0 m
M062E-10-1-100-2-0	10.0 m

Without Holding Brake	Length
M062E-10-0-015-2-0	1.5 m
M062E-10-0-030-2-0	3.0 m
M062E-10-0-050-2-0	5.0 m
M062E-10-0-100-2-0	10.0 m

INFORMATION

The Shielding/PE connections of the motor cable, as well as the encoder cable shielding must be grounded via the 6.3 mm blade receptacle provided on the respective cables. With increased interference, it may be necessary to also connect the motor and encoder cable on the motor side.

If the Tyco connector could experience strain during use, it must be equipped with proper strain relief directly before and after the connector.

9.2 Servo Motor and Encoder Cables

Highly flexible servo motor and encoder cables for use in energy supply chains. The oil-resistant, abrasion- and cut-resistant polyurethane jacket allows use especially in industrial environments.

Advantages:

UL and CSA approved, halogen-free and cold-resistant. The cables are available in fixed prefabricated lengths.

Temperature range:

flexible: -10 °C to +60 °C - fixed: -50 °C to +80 °C

INFORMATION

Use wires rated for at least 75 °C.

Minimum bending radius:

Servo motor cable:
Fixed installation: 7,5 x D / Flexible use: 10 x D

Encoder cable:
Fixed installation: 4 x D / Flexible use: 7,5 x D

10 Motor Overload Protection

Equipment does not incorporate motor overload protection. External or remote overload protection in accordance with National Electrical Code and any additional local codes must be provided in the field.
Motor overtemperature sensing is not provided by the drive.

11 Additional Safety Information

The Safety function “STO” is an integrated part of the DC 062(-X). It meets all necessary requirements for safe operation in SILCL 3 according to EN IEC 62061 and in compliance with PL e. Cat. 4 in accordance with EN ISO 13849-1.

CAUTION

The instructions contained in this document must be followed.

The DC 062 can only be powered by supplies that meet the requirements for SELV or PELV in compliance with EN 60204.

For error-free operation, proper transport and storage are essential. See chapter 2 for more information.

Installation, mounting, programming, initial start-up, operation, maintenance and decommissioning can only be performed by qualified personnel.

Qualified personnel in this context are people, who have completed training or have trained under supervision of qualified personnel and have been authorized to operate and maintain safety-related equipment, systems and facilities in compliance with the strict guidelines and standards of safety technology. The applicable environmental conditions must be maintained.

Les instructions contenues dans ce document doivent être suivies.

Le DC 062 ne peut être alimenté que par des alimentations répondant aux exigences SELV ou PELV selon EN 60204.

Pour un fonctionnement sans erreur, le transport et le stockage appropriés sont essentiels. Voir le chapitre 8 pour plus d’informations.

L’installation, le montage, la programmation, la mise en service initiale, l’exploitation, la maintenance et la mise hors service ne peuvent être effectués que par une personne qualifiée.

Dans ce contexte, on entend par personnel qualifié les personnes qui ont suivi une formation ou qui ont été formées sous la supervision d’un personnel qualifié et qui ont été autorisées à utiliser et à entretenir l’équipement, les systèmes et les installations de sécurité conformément aux directives et aux normes strictes de la technique de sécurité. Les conditions environnementales applicables doivent être respectées.

For your own safety and that of others, the safety modules should be used for their designated purpose only.

Correct EMC installation is also included in the designated use.

Pour votre propre sécurité et celle des autres, les modules de sécurité ne doivent être utilisés qu’à des fins prévues.

Une installation CEM correcte est également incluse dans l’utilisation prevue.

Non-designated use consists of:

- any changes made to the module or the use of damaged modules.
- use of the module inconsistent with the technical margins described in this manual or the speciation's defined in the technical data (see chapter 3).

L'utilisation non désignée consiste en:

- toute modification apportée au module ou l'utilisation des modules endommagés.
- utilisation du module non conforme aux marges techniques décrites dans ce manuel ou aux spécifications définies dans les données techniques (voir chapitre 3).

DANGER

Failure to follow the above safety measures can lead to severe injuries.

Le non-respect des mesures de sécurité ci-dessus peut entraîner des blessures graves.

- Only trained personnel are authorized to install the "safe re-start lock" STO (Safe Torque off) and set the parameters.
- All control devices (switches, relays, PLC, etc.) and the control cabinet must meet the requirements for EN 13849 This consists of:
  - Door switches, etc. with at least IP54 protection.
  - Control cabinet with at least IP54 protection.
- The proper cables and end-sleeves must be used
- All cables that affect safety (e.g. control cables for the ENABLE 1 and ENABLE 2 inputs) must be laid in a cable duct outside of the control cabinet. Short or crossed circuits in the signal lines must be avoided! See EN ISO 13849
- If external forces influence axes that are used with the STO safety function (e.g. hanging load), additional measures must be taken (such as an electromagnetic double-surface spring brake, instead of a permanent magnet brake).

- Seul un personnel qualifié est autorisé à installer le "blocage de redémarrage sûr" STO (Safe Torque off) et à régler les parameters.
- Tous les appareils de commande (interrupteurs, relais, API, etc.) et l'armoire de commande doivent satisfaire aux exigences de la norme EN 13849:
  - Interrupteurs de porte, etc. avec au moins un in dice de protection IP54.
  - Classes de contrôle avec au moins un indice de protection IP54.
- Les câbles et les embouts appropriés doivent être utilisés.
- Tous les câbles affectant la sécurité (par ex. les câbles de commande pour les entrées ENABLE 1 et ENABLE 2) doivent être posés dans un conduit de câbles de raccordement à

l'extérieur de l'armoire électrique. Eviter les courts-circuits ou les courts-circuits croisés dans les lignes de signalisation ! Voir EN ISO 13849

- Si des forces externes influencent les axes utilisés avec la fonction de sécurité STO (par ex. charge suspendue), des mesures supplémentaires doivent être prises (par ex. un frein à ressort électromagnétique à double surface au lieu d'un frein à aimant permanent).

CAUTION

The main power supply for the servo amplifier must be disconnected using the main switch for the following instances:

- Cleaning, maintenance or repairs
- Extended still-stand periods

L'alimentation principale du variateur doit être débranchée à l'aide de l'interrupteur principal dans les cas suivants :

- Nettoyage, entretien ou réparation
- Périodes d'immobilisation prolongées

11.1 STO

The DC 062(-X) supports the safety functions STO (Safe Torque Off) and meets the requirements for Category 4 Performance Level "e" according to EN ISO 13849-1 and SILCL 3 according to EN IEC 62061.
For his purpose, the servo amplifier has two safe inputs ENABLE 1 and ENABLE 2.

The stop brake control is not a component of the safety function. If a safe shutdown of the stop brake is required, the +24 V-BR brake supply must also be shut down externally.

11.2 Function

The safety functions in the DC 062(-X) are controlled over two digital inputs.

The following table shows the status that the ENABLE 1 and ENABLE 2 inputs must assume to enable normal operation or trigger the safety function.

Input Status		**Description**
ENABLE 1	**ENABLE 2**	
Open	Open	**Safe status of the drive system**
Open	Low	
Low	Open	
Low	Low	
Low	High	
High	Low	
High	High	**Drive system ready**

If the ENABLE 1 and ENABLE 2 are changed from any status to the "Drive Ready" status, the servo amplifier is not immediately enabled. In order to set the system to the status “Drive system ready”, a change from “Low - Low” to “High - High” has to be executed.

11.3 Function Test

WARNING

The safety function test is required to ensure correct operation. The entire safety circuit must be tested for full functionality.

Tests must be performed at the following times:

- After installation
- In regular intervals, or at least once a year

If the function test results in an invalid machine status, the error must be found and corrected before the safety function is retested. If the error reoccurs during the function test, the machine can no longer be operated.

12 Wiring Example

In the following sub chapters, wiring examples are provided. It must be ensured that all constructive measures etc. are complied with and applied in order to fulfill the requirements of the category used.

12.1 Performance Level e, Category 4 or SILCL 3 – Safety PLC

To meet the requirements of category 4, performance Level "e" for EN ISO 13849-1 and SILCL 3 according to EN IEC 62061, two error-proof output of a Safety PLC must be used. Cross-circuit detection between the two lines via the output tests of the STO 081 is hereby possible.

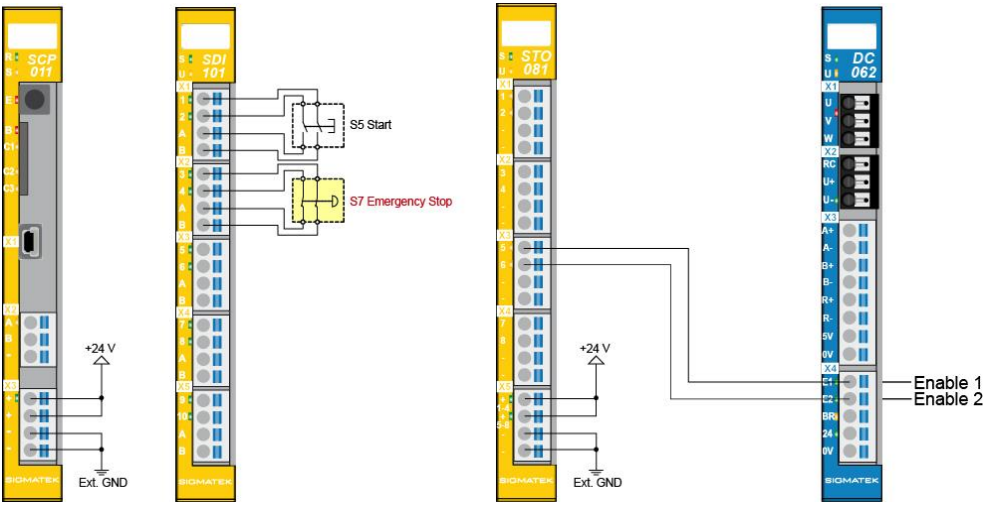

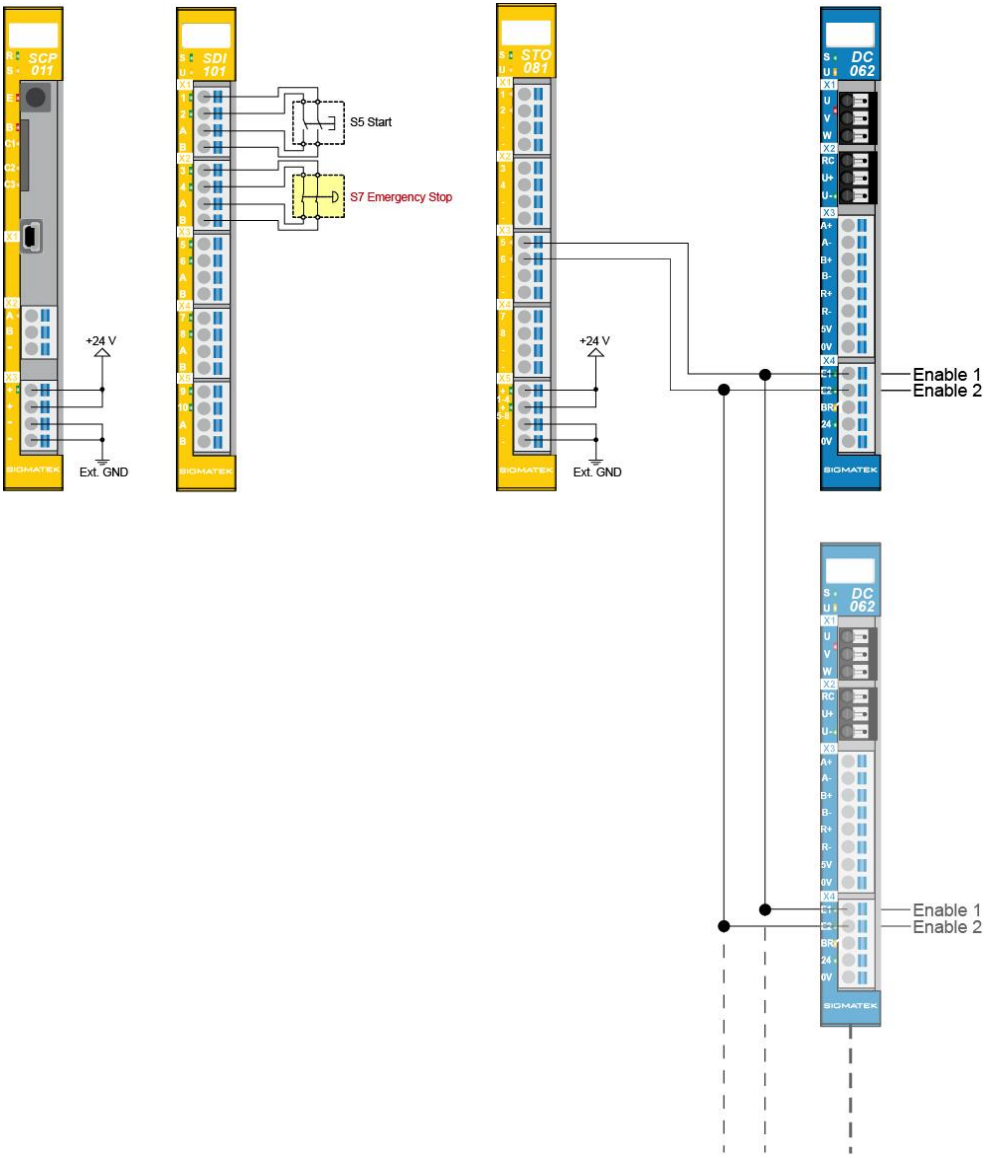
SCP 011
SDI 101
STO 081
DC 062
S5 Start
S7 Emergency Stop
+24 V
Ext. GND
+24 V
Ext. GND
Enable 1
Enable 2
DC 062
Enable 1
Enable 2

12.2 Performance Level e, Category 3 & SILCL 3 – Safety PLC

To meet the requirements of safety category 3, performance level "e" for EN 13849-1 and SILCL 3 according to EN IEC 62061, an error-proof output of a safety PLC must be used. The reason of category 3 here, is that cross-circuit detection between the two lines is not possible.

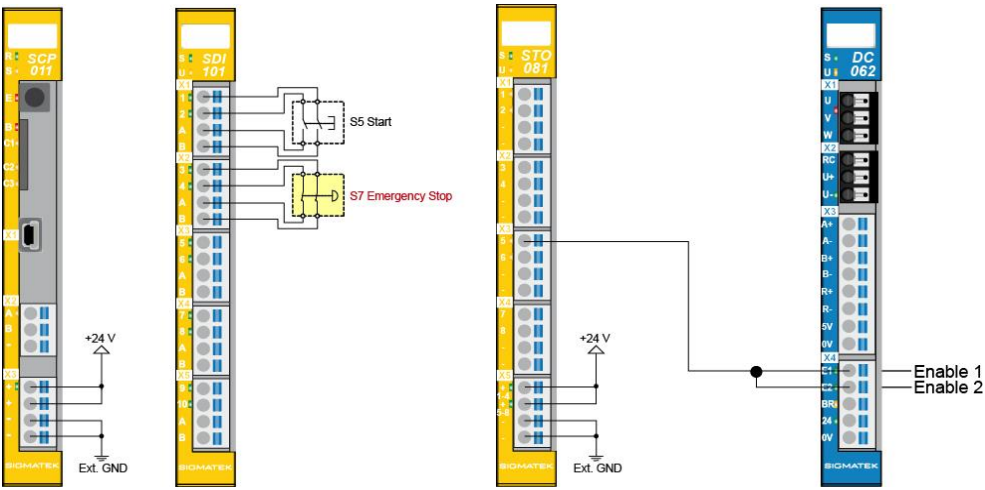

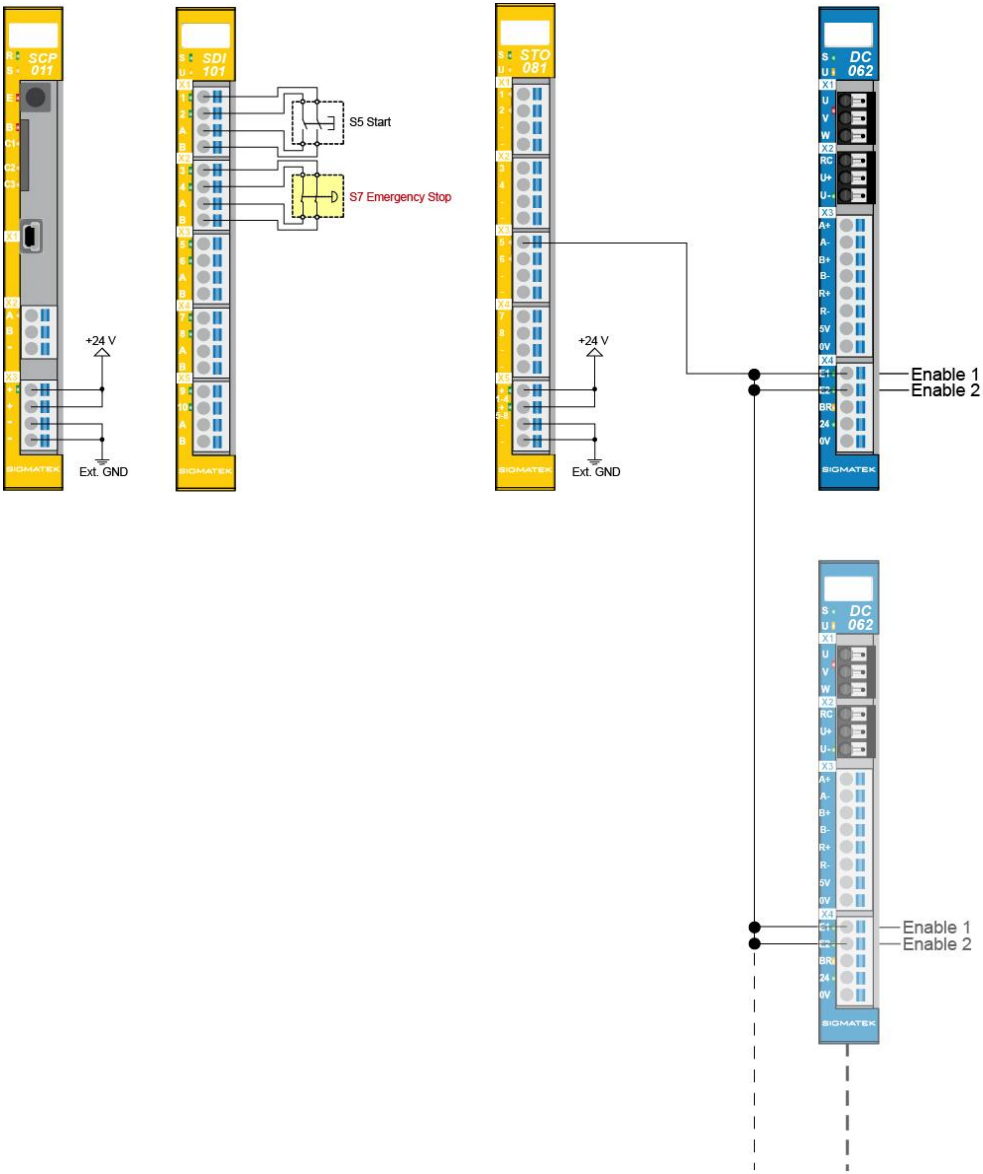
SCP 011
SDI 101
STO 081
DC 062
S5 Start
S7 Emergency Stop
+24 V
Ext. GND
+24 V
Ext. GND
Enable 1
Enable 2
DC 062
Enable 1
Enable 2

12.3 Performance Level e, Category 4 or SILCL 3 – Conventional

To meet the requirements of safety category 4, performance level "e" for EN ISO 13849-1 and SILCL 3 according to EN IEC 62061, the placement of the lines must comply with EN ISO 13849-2, table D.4 (separate placement, prohibiting of error via short circuits between wires) as cross-circuit detection is not possible here.

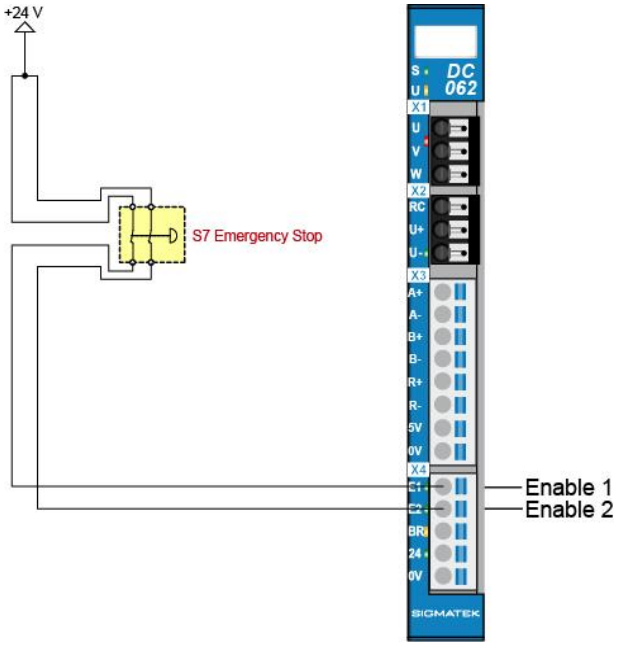

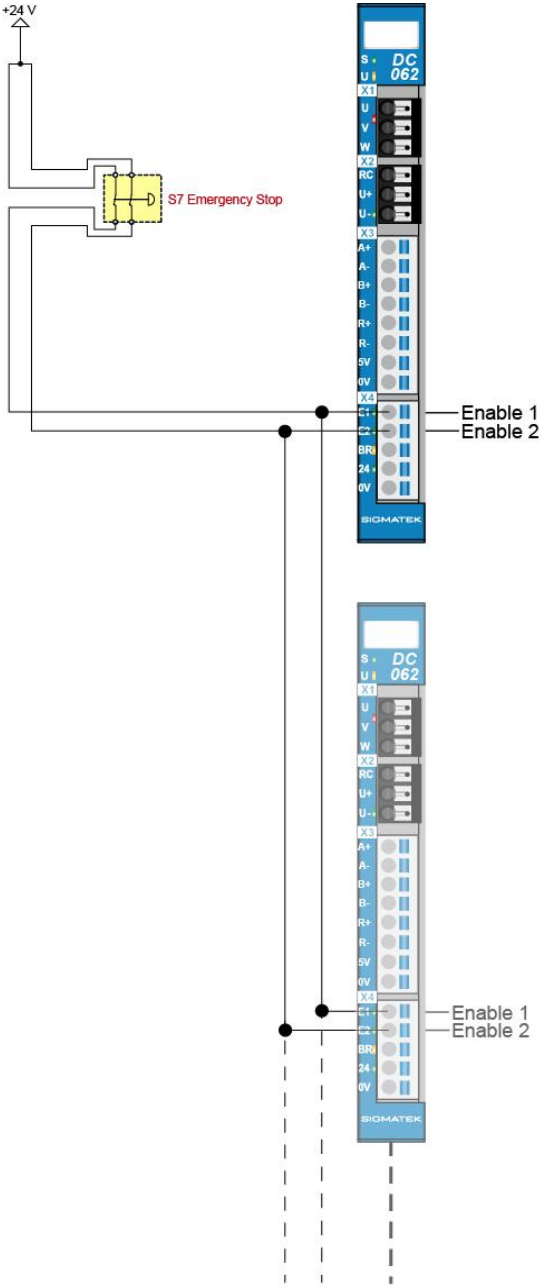
+24 V
S7 Emergency Stop
DC 062
X1
U
V
W
X2
RC
U+
U-
X3
A+
A-
B+
B-
R+
R-
5V
0V
X4
E1
E2
BR
24
0V
SIGMATEK
Enable 1
Enable 2
DC 062
X1
U
V
W
X2
RC
U+
U-
X3
A+
A-
B+
B-
R+
R-
5V
0V
X4
E1
E2
BR
24
0V
SIGMATEK
Enable 1
Enable 2

12.4 Performance Level d, Category 2 or SIL 2 – Conventional

This involves 1-channel wiring, whereby the Enable inputs are tested separately. Here, no cross-circuit detection is possible.

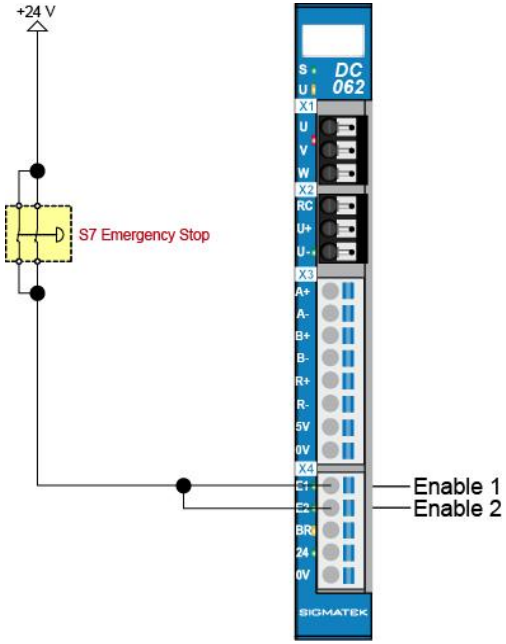

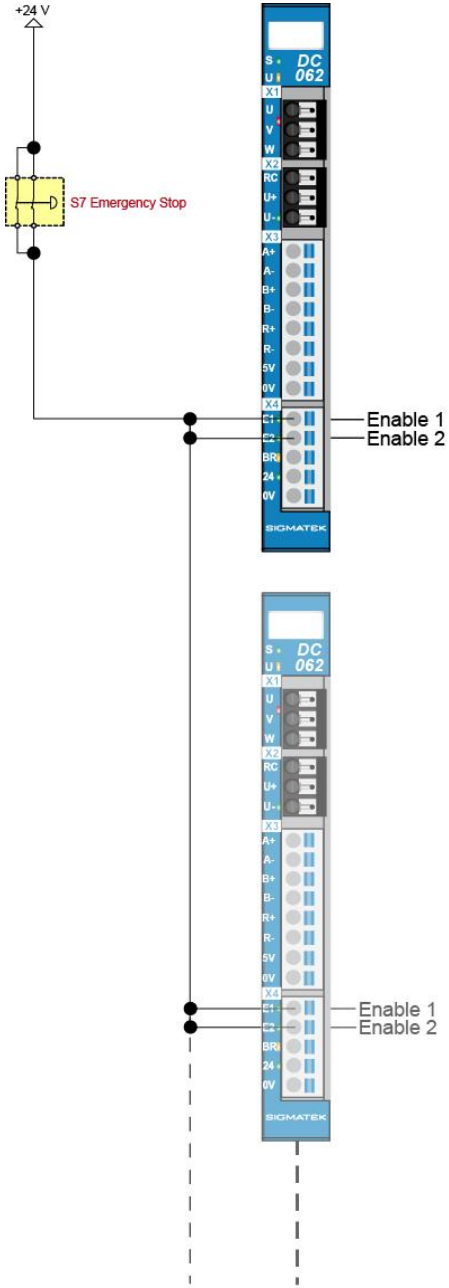
+24 V
S7 Emergency Stop
DC 062
X1
U
V
W
X2
RC
U+
U-
X3
A+
A-
B+
B-
R+
R-
5V
0V
X4
C1
C2
BR
24
0V
SIGMATEK
Enable 1
Enable 2
DC 062
X1
U
V
W
X2
RC
U+
U-
X3
A+
A-
B+
B-
R+
R-
5V
0V
X4
C1
C2
BR
24
0V
SIGMATEK
Enable 1
Enable 2

13 Assembly/Installation

13.1 Check Contents of Delivery

Ensure that the contents of the delivery are complete and intact. See chapter Contents of Delivery.

INFORMATION

On receipt and before initial use, check the device for damage. If the device is damaged, contact our customer service and do not install the device in your system.

Damaged components can disrupt or damage the system.

13.2 Mounting

The S-DIAS modules are designed for installation into the control cabinet. To mount the modules a DIN-rail is required. The DIN rail must establish a conductive connection with the back wall of the control cabinet. The individual S-DIAS modules are mounted on the DIN rail as a block and secured with latches. The functional ground connection from the module to the DIN rail is made via the grounding clamp on the back of the S-DIAS modules. The modules must be mounted horizontally (module label up) with sufficient clearance between the ventilation slots of the S-DIAS module blocks and nearby components and/or the control cabinet wall. This is necessary for optimal cooling and air circulation, so that proper function up to the maximum operating temperature is ensured.

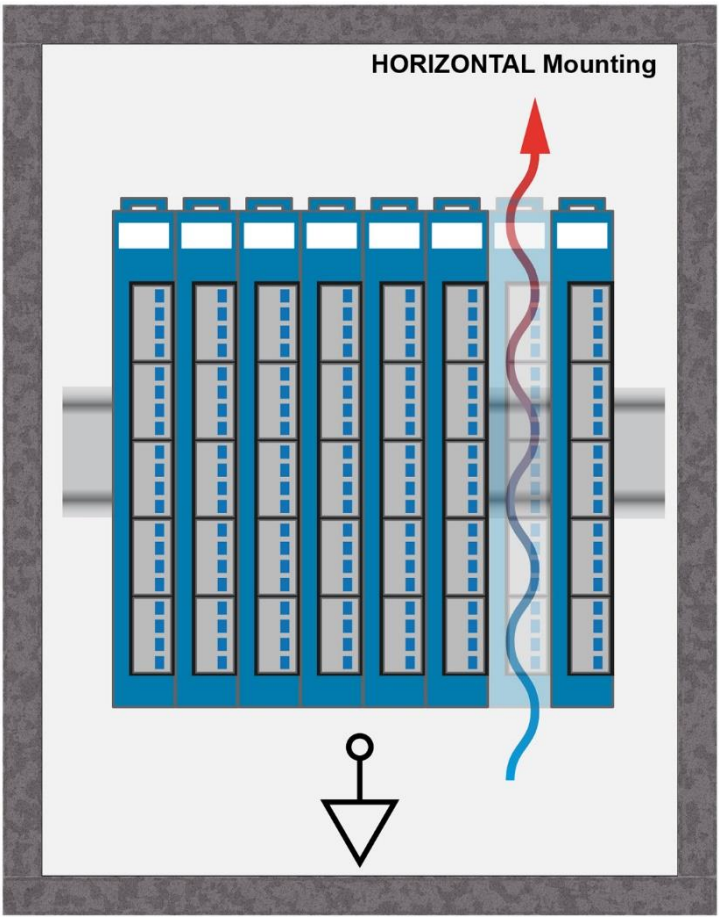

Recommended minimum distances of the S-DIAS modules to the surrounding components or control cabinet wall:

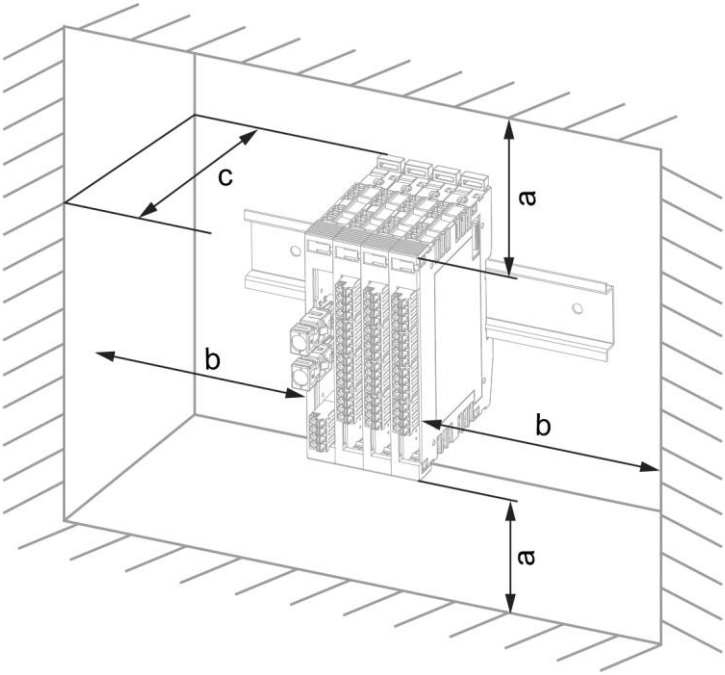

a	b	c
30 mm (1.18″)	**30 mm** (1.18″)	**100 mm** (3.94″)

a, b, c … distances in mm (inches)

14 Supported Cycle Times

The DC 062 can be accessed via the S-DIAS bus with different bus cycle times.

14.1 Cycle Times below 1 ms (in µs)

50	100	125	200	250	500
					x

x= supported

14.2 Cycle Times equal to or higher than 1 ms (in ms)

1	2	3	4	5	6	7	8	9	10	11	12	13	14	15	16
x	x	x	x	x	x	x	x	x	x	x	x	x	x	x	x

x= supported

17	18	19	20	21	22	23	24	25	26	27	28	29	30	31	32
x	x	x	x	x	x	x	x	x	x	x	x	x	x	x	x

x= supported

15 Transport/Storage

INFORMATION

This device contains sensitive electronics. During transport and storage, high mechanical stress must therefore be avoided.

For storage and transport, the same values for humidity and vibration as for operation must be maintained!

Temperature and humidity fluctuations may occur during transport. Ensure that no moisture condenses in or on the device, by allowing the device to acclimate to the room temperature while turned off.

When sent, the device should be transported in the original packaging if possible. Otherwise, packaging should be selected that sufficiently protects the product from external mechanical influences. Such as cardboard filled with air cushioning.

16 Storage

INFORMATION

When not in use, store the operating panel according to the storage conditions. See chapter 13.

During storage, ensure that all protective covers (if available) are placed correctly, so that no contamination, foreign bodies or fluids enter the device.

17 Maintenance

INFORMATION

During maintenance as well as servicing, observe the safety instructions from chapter Basic Safety Directives.

17.1 Service

This product was constructed for low-maintenance operation.

17.2 Repair

INFORMATION

In the event of a defect/repair, send the device with a detailed error description to the address listed at the beginning of this document.

For transport conditions, see chapter Transport/Storage.

18 Disposal

INFORMATION

Should you need to dispose of the device, the national regulations for disposal must be followed.

The device appliance must not be disposed of as household waste.

Documentation Changes

Change date	Affected page(s)	Chapter	Note
29.01.2015	3, 4	1.1 Motor Driver Specifications 1.6 Electrical Requirements	Operating Voltage to +18-55 V changed
30.01.2015	9	3.2 Applicable Connectors	Added note concerning connecting the S-DIAS module while voltage is applied
10.02.2015	5 5 6 12	1.6 Electrical Requirements 1.7 Miscellaneous 1.8 Environmental Conditions 5 Motor Overload Protection 6 Safety	Added note (Only suitable for connection…) Added Standard Added Pollution degree Added Motor Overload Protection and Safety
16.02.2015	4 5	1.5 Regen Brake Specifications 1.6 Electrical Requirements	Added, threshold regen braking on/off Added, voltage threshold for motor voltage monitor
13.03.2015	13	6.2 Safety-Relevant Parameters	Updated table (added STO)
23.03.2015	11	3.2 Applicable Connectors	Changed connectors
26.03.2015	11	3.2 Applicable Connectors	Added connections
18.05.2015	7	1.8 Environmental Conditions	Expanded vibration resistance
16.07.2015	4	1.5 Regen Brake Specifications	Note usable regen resistor
22.07.2015	6	1.6 Electrical Requirements	Added mnemotechnic verse: Use 75 °C wires only and Motor overtemperature sensing is not…
05.10.2015	1		Photo changed
12.11.2015	8	3 Connector Layout	Connector layout enhanced
27.11.2015	3	1.2 Incremental Encoder Specifications	TTL deleted
11.03.2016	8	3. Connector Layout	TTL deleted

31.03.2016		4.1 Wiring Example 7 Additional Safety Information 8 Wiring Example	Diagram changed Chapters added
28.04.2016	20	5 Mounting	Graphics distances
19.07.2016	17 18-25 27	7.2 Function 8 Wiring Examples 9 Mounting	Expanded table and description Updated and expanded chapter Changed environmental temperature in graphic to 50 °C
06.02.2017	6	1.6 Electrical Requirements	Added warning
19.05.2017	13	4.1 Wiring example	Diagram replaced
17.08.2017	8 12	1.8 Environmental Conditions 3.2 Applicable Connectors	Added operating conditions Added sleeve length Added info regarding ultrasonically welded strands
18.10.2017	13 28	3.3 Label Field 9 Mounting	Added chapter Graphic replaced
15.12.2017	6	1.6 Electrical Requirements	Note Servo Motor Braking added
31.01.2018	13	3.2 Applicable Connectors	Connections Weidmüller added
04.04.2018	5	1.5 Regen Brake Specifications	“Lowest possible resistance” added
18.06.2018	7	1.6 Electrical Requirements	Notes updated
13.08.2018	17	4.1.1 Wiring Moons Motors with Tyco Connectors	Chapter added
02.04.2019	18 9 all	6.3 Safety-Relevant Parameters 1.8 Environmental Conditions	Correction of the safety-relevant parameters Corrections environmental conditions Corrections due to CE
17.07.2019	10	2.4 Holding Brake Specifications	Maximum switch-off energy added
28.10.2019	8	2.2 Incremental Encoder Specifications	Info commutation search added
14.11.2019		13 Supported Cycle Times	Chapter added
25.11.2019	16 25	2.8 Environmental Conditions 7.3 Safety-Relevant Parameters	Functional security added Updated and expanded chapter

	27	Additional Safety Information	SS1 removed
20.01.2020	9	2.1 Motor Driver Specifications	Operating voltage changed
	12	2.6 Electrical Requirements	Supply voltage motor changed
	22	5.1 Wiring Example	Info – point added
	25	6 Motor Overload Protection	Motor overtemperature added
29.01.2020	9	2.2 Incremental Encoder Specifications	Footer line inserted
	17	4 Connector Layout	Graphics exchanged
	23	5.2 Servo Motor and Encoder Cables	Chapter added
28.02.2020	42	13 Supported Cycle Times	Text adapted
08.09.2020	43	15 Hardware Class DC062	Chapter added
04.11.2020	39	11 Mounting	Expansion function ground connection
28.01.2021	9	2.1 Motor Driver Specifications	PWM frequency added
25.02.2021		All	DC 062-X added
23.04.2021	11	2.3 Enable Inputs Specifications	Output test signal Control added
01.07.2021		2.2 Incremental Encoder Specifications	Integrated in module
17.09.2021		2.6 Electrical Requirements	Note for cable lengths added
05.12.2023		Introduction	DC062-X added
	13	3 IT Security	Chapter added
	24	6.7 Miscellaneous	Mission time and Reaction time added
	24	6.8 Environmental Conditions	Noise emissions added
	52	14 Supported Cycle Times	Description added
		15 Hardware Class DC062	Chapter removed