1 General

1.1 About this Handbook

This handbook describes the servo amplifiers for the DIAS-Drive series. You will find additional information on the safety functions and the existing inputs and outputs in the used VAC 013 interface module in the according chapter.

The individual chapters:

- Technical Data
- Assembly and Installation
- Description of interfaces
- Servo Amplifier settings
- Accessories
- Transport, Storage, Maintenance, Disposal

Abbreviations used in this handbook

Abbreviation	Definition
AWG	American Wire Gauge
BGND	Mass for the 24 V auxiliary and braking supply
CE	Communité Europeenne
CLOCK	Clock signal
EMV	Electromagnetic tolerance
EN	European Norm
IGBT	Insulated Gate Bipolar Transistor
LED	Light emitting diode
PELV	protected Extra Low Voltage
RES	Resolver
$R_{int.}$	Internal brake resistor connection
R_{tr}	Brake chopper connection
V AC	Alternating current
+24 V DC	Direct current

1.2 Abbreviations used in this handbook

	**Danger!**	**Electric Shock**	Danger of electric shock
	**Warning!**	**General**	Danger posed by machines, general warning
	**Warning!**	**Hot Surface**	Temperatures over 80°C (176°F)
	**Important Note**		See handbook

1.3 Safety Guidelines

Before installation and startup, it is important to read the documentation provided. Incorrect handling of the servo amplifier can lead to personnel injury or material damage. The technical data and connection instructions (specification label and documentation) must be followed.

Only qualified personnel may perform tasks such as transportation, assembly, Initial startup and maintenance. Qualified personnel are persons familiar with the transportation, setup, assembly, initial startup and operation of motors and possess the corresponding qualifications for their specific job.

The machine manufacturer must perform a safety analysis for the entire machine. The manufacturer must take appropriate measures to ensure that no injuries or damage can be caused by unexpected movements.

Improper operation of the servo amplifier or failure to follow the following guidelines and improper handling of the safety equipment can cause damage to the machine, personnel injury, electrical shock or in extreme cases, death.

Notes

Danger! Electrical shock

After disconnecting the servo amplifier from the voltage supply, a wait-time of 5 minutes is required before current conducting components in the amplifier (i.e. clamps) can be touched or connectors removed. After turning off the voltage supply, the internal capacitors can remain at dangerous voltage levels for up to 5 minutes. For safety purposes, measure the voltage in the intermediate circuit and wait until the voltage is below 40 V.

The electrical connectors of the servo amplifier cannot be removed while voltage is still applied. The possibility for arcing exists and could cause injury as well as damage to the contacts.

When using a ground fault interrupter in the circuit, a type B FI-switch must be used. If a type "A" FI-switch of is used, a DC ground fault could cause a malfunction.

Failure to follow these instructions can lead to death, serious injury or damage to the machine.

Warning General

The use of the servo amplifier is defined by EN61800-3. In residential areas, EMI problems can arise. In such a case, the user must take additional filtering measures.

The servo amplifier contains electrostatic-sensitive components, which can be damaged by improper handling. Before touching the servo amplifier, the user must discharge their body by touching a grounded object with a conductive surface. Contact with highly insolated material (synthetic fiber, plastic foil etc.) must be avoided. The servo amplifier must be placed on a conductive surface.

The device cannot be opened. During operation, all covers and cabinet doors must be closed to avoid the danger of death, serious health risks or material damage.

According to their protection type, servo amplifiers can contain blank components that are conductive. Control and power connections can have a voltage even when the motor is not turning.

The main voltage supply for the DIAS-Drive requires a fixed connection. If the servo amplifier is mounted with a connector terminal to a moving machine part, the earth connection must have a cross section of at least 10 mm^2 (8 AWG) due to the high residual current (>3.5 mA) of the amplifier.

The +24 V auxiliary supply voltage as well as the +24 V-BR voltage supply for the holding brake must be galvanically separated as PELV according to EN 60950.

Failure to follow the above safety measures can lead to severe injuries and machine damage.

CAUTION! Hot surface

During operation, the heat sink of the servo amplifier can reach temperatures of over 80° C (176° F). The heat sink temperature should be checked before handling and it may be necessary to wait until it is below 40° C (104° F).

Failure to follow the above safety measures can lead to severe injuries.

Caution! Electromagnetic Fields (EMF)

Mortal danger!

Due to the electromagnetic fields generated during operation of the servo amplifier, people with pacemakers or implants are particularly at risk if they are in the immediate vicinity of the device.

Caution must therefore be take to ensure that such persons maintain the necessary safety distance of at least 2 m.

1.4 Servo Amplifier Components

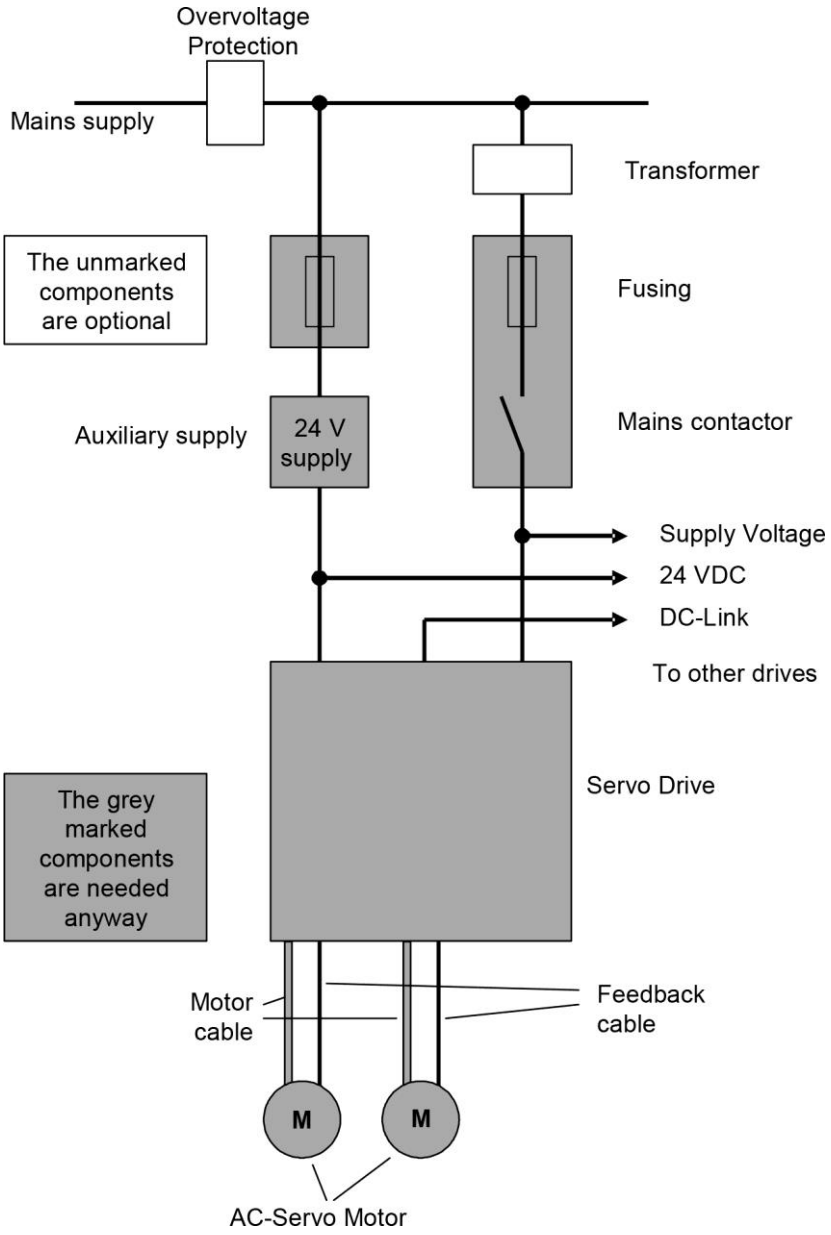

1.5 European Guidelines and Standards

Servo amplifiers and components, which are designed for installation in electrical systems/machines for industrial use. With the installation into machines/systems, the servo amplifier should not be operated until it has been determined that the machine/system meets the requirements of the machine guideline 2006/42/EC and the EMV guideline 2014/30/EU.

Note: The machine manufacturer must perform a safety analysis for the entire machine. With the appropriate measures, the manufacturer ensures that no injuries or damage can be caused by unexpected movements.

CE– Conformity

With the supply of servo amplifiers within the European Union, compliance with the EMC 2014/30/EU and low voltage 2014/35/EU guidelines is mandatory.

With this servo amplifier, the harmonized standard EN 61800-5-1 (Electrical Power Amplifier Systems with Adjustable Speed - part 5-1: Requirements for the Safety of Electrical, Thermal and Energetic Demands) was used for the 2014/35/EU low voltage guideline.

With this servo amplifier, the harmonized standard EN 61800-3 (Electrical Power Amplifier systems with Adjustable Speed - Part 3: EMC product standard including special test methods) was used for the 2014/30/EU guideline.

To meet the EMI conditions for the installation, the documentation contains detailed information on:

- shielding
- grounding
- wiring in the control cabinet
- filters (if necessary)

The servo amplifier from the DIAS-Drive series was tested with the systems components and the corresponding configuration described in this document.
Any change in the configuration and installation described in this document requires new measurements to ensure that standards are met.

1.6 Designated Use

The servo amplifier from SIGMATEK GmbH & Co KG was designed and produced with state of the art technology. The product was tested for reliability before delivery. It is an installed component for electrical systems and can only be operated as an integral part. Before installation, the following conditions for designated use must be met:

- Each user of the product must read and understand the safety instructions for designated and non-designated use.
- The machine manufacture must perform a safety analysis of the machine in order to ensure that no injury or damage is caused to personnel and equipment by unexpected movements.
- The servo amplifier must be operated under the assembly and installation conditions described in this document. The environmental conditions (temperature, protection class, humidity, voltage supply, EMI and mounting position) must be especially observed.
- The amplifier can only be operated in a control cabinet.
- The Servo amplifier must be operated in the original condition without any mechanical or electrical changes.
- Mechanical or electrical defects or defective servo amplifiers may be not be mounted or operated.
- The servo amplifier is provided for the control of synchronous servo, linear and torque motors, as well as frequency, torque, speed or position control of asynchronous motors.
- The specified rated voltage of the motor must be at least as high as the power supply voltage of the servo amplifier (230V, 400V or 480V).
- Only motors with star-connection may be used.
- This product can lead to EMI disruptions in residential areas. In such a case, the user must take additional filtering measures.

1.7 Non-Designated Use

If a servo amplifier is operated according to the environmental conditions described in this document, it is "designated use".

- Single-phase operation is not authorized as standard use, but is allowed for initial startup and demonstration purposes.
- Because of salt-containing and conductive contamination, the servo amplifier cannot be used on ships (sea operation) or in offshore applications.
- The servo amplifier cannot be operated under any environmental conditions other than those described in this documentation (meaning without a control cabinet, incorrect assembly etc.)

Special care is needed for production facilities, in which conductive material such as carbon fiber, graphite, and cast iron chips or similar material is used. In such cases, the control cabinet must be hermetically sealed (no ventilation with fan filters) or placed outside of the contaminated area. Especially during the initial start-up, the danger posed by open control cabinet doors is extremely high. Contaminated servo amplifiers may no longer be used.

1.8 Block Diagram

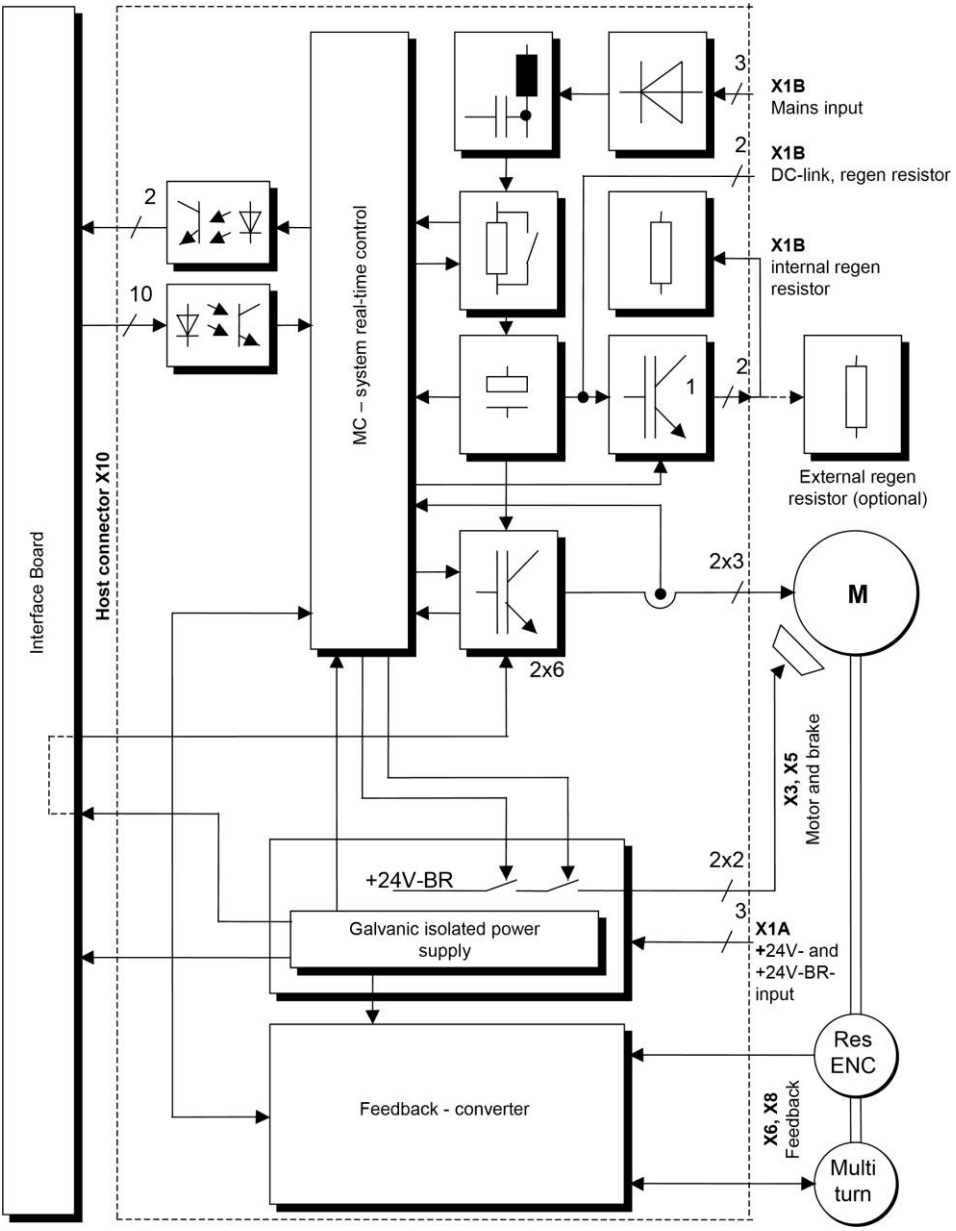

Hardware

- The main supply is connected to a rectifier, input filter and a load circuit, which reduces the load current for the electrical torque.
- IGBT – Power output stage with separate current measurement (short circuit protected).
- Short circuit protected brake chopper with internal brake resistor. With insufficient power, the internal resistor can be disconnected and replaced by an external one.
- DC link for connection to additional amplifiers.
- Auxiliary voltage for the internal supply.
- Separate voltage supply for the holding brake.
- Evaluation from the Resolver, EnDAT and Hiperface sensors.
- Micro controller system with communication for the interface

DIAS-Drive Concept

- 1 and 3-axis amplifiers to reduce machine costs. 3-axis amplifiers have advantages through components savings
- Auto-range function to optimize the resolution of the actual current of 10 A axes, in various configurations.
- Two different mounting options.
  - On a mounting plate in the control cabinet
  Through-hole technology
- Large input voltage range; 3 x 230VAC-10% … 3 x 480VAC+10% powered by TN or TT supplies with grounded neutral lines and a maximum symmetrical current of 5000 Aeff.
- TT supplies without grounded neutral wires require additional measures.
- Load circuit for limiting the maximum load current in the electrical torque.
- Fuse installed by user (phase failure is monitored by the amplifier)
- 1-phase operation is possible, i.e. initial start-up
- 24 V auxiliary supply, galvanically isolated for independent power.
- Separate 24 Volt connection to power the holding brakes.
- Noise filter for the main, 24V auxiliary and holding brake supplies, class A (industrial use)
- Housing with connection for the cable shielding
- Protective functions against:
  - Under or over voltage in the intermediate circuit.
  - Several short circuit conditions
  - Phase error in the main supply
  - Brake resistance over heating
  - Over temperature (heat sink, environment and motor)

Software functions

- Modified space vector modulation (SVM) technology to reduce power output loss.
- Field oriented current regulator (update every 62.5 µs)
- Feedback evaluation and speed controller (update every 62.5µs)
- Spline interpolation and position controller (update every 62.5µs)
- Full synchronization up to the output stage to the control frequency with cycle times of 250µs, 500µs and 1ms to 8 ms
- The servo amplifier has a volatile data storage medium. After power-up, the parameters are loaded to the servo amplifier through the host.
- Since FW version 1.82 the electrical rotary field frequency is limited to 599 Hz. Error bit 18 is set, if the frequency is higher than 599 Hz for longer than one second. The drive then goes to error status. Reason might be a too high rotational speed of the motors with a high pole number.

1.9 Technical Data

	DIM	DIAS-Drive SDD 210-23
Rated values		
Rated input voltage (symmetrical opposite to earth) max. 5000 Aeff. (L1, L2, L3)	V_{AC}	3 x 230V-10% - 480V 10% , 45 – 65 Hz
Max. peak current in electrical torque (limited by the load circuit)	A	2.5
Rated power in S1 mode	kVA	14
Rated intermediate circuit voltage	V_{DC}	290 - 680
Over voltage protection - limit for the intermediate circuit	V_{DC}	450 - 900
Additional voltage supply +24V	V_{DC}	22 - 30
Power from the additional +24 supply	W	35
Holding brake supply +24V-BR	V_{DC}	25 - 27
Max. Holding brake current per axis	A_{DC}	2
Holding brake voltage drop with a load +24V-BR	V_{DC}	Max. 1 (at 2 x 2 A Stop brake current)
Max. holding brake switching energy	mJ	100
Rated current for axis 1 (eff. +/- 3%)	A_{rms}	10
Max. standstill current axis 1 from 500 ms	A_{rms}	7
Rated current for axis 2 (eff. +/- 3%)	A_{rms}	10
Max. standstill current axis 2 from 500 ms	A_{rms}	7
Max. total continuous current of all axis (heat sink)	A_{rms}	20
Peak output current axis 1 for a max. 5s (eff. +/- 3%)	A_{rms}	20
Peak output current axis 2 for a max. 5s (eff. +/- 3%)	A_{rms}	20
The loss in the power output stage (add the average current of the 2 axes and multiply by the factor) without brake unit loss	W / A_{rms}	10
Output frequency of the power output stage	kHz	8
Maximum output current for 8 V - feedback systems at X6, X8	mA	250
Minimum output current for 8 V - feedback systems at X6, X8	mA	0
Maximum output current for 5 V - feedback systems at X6, X8	mA	250
Minimum output current for 5 V - feedback systems at X6, X8	mA	50
Maximum residual current	mA	15

PWM frequency	kHz	8
Regulator frequency	kHz	16
Brake unit		
Capacitance of the intermediate circuit voltage	µF	700
External brake resistance	Ω	25 - 50
Internal brake resistance	Ω	25
Rated power of the internal brake resistor	W	200
G-VMAINS =230 (rated supply voltage = 230V)		
Start-up limit	V_{DC}	420
Switch-off level	V_{DC}	400
Over voltage protection	V_{DC}	450
Max. rated power of the external brake resistor	W	750
Peak internal brake resistance power (max. 1s)	kW	6.5
G-VMAINS = 400 (rated supply voltage = 400V)		
Start-up limit	V_{DC}	730
Switch-off level	V_{DC}	690
Over voltage protection	V_{DC}	800
Max. rated power of the external brake resistor	W	1200
Peak internal brake resistance power (max. 1s)	kW	21
G-VMAINS = 480 (rated supply voltage = 480V)		
Start-up limit	V_{DC}	850
Switch-off level	V_{DC}	810
Over voltage protection	V_{DC}	900
Max. rated power of the external brake resistor	W	1500
Peak internal brake resistance power (max. 1s)	kW	27
Internal fuse		
24V auxiliary supply voltage (+24V to BGND)	-	Electronic fuse
Holding brake supply 24V-BR (+24V-BR to BGND)	-	Electronic fuse
Brake resistance	-	Electronic protection
Resolver specfications		
Exciter frequency f_{err}	kHz	8
Exciter voltage U_{Ref}	U_{eff}	4
Number of poles m	-	2, 4, 6, .., 32
Resolver voltage $U_{sin/cos, max}$	U_{eff}	2.2

Connector types		
Internal auxiliary power supply (X1A)	-	Combicon 5, 3-pin, 2.5mm²
Power supply (X1B)	-	Power Combicon 7.62, 8-pin, 4mm²
Feedback (X6, X8)	-	Sub-D 25-pin (female)
Motor (X3, X5)	-	Power Combicon 7.62, 6-pin, 4mm²
Dimensions		
Height with/without connector plugs	mm	472 / 378
Width	mm	158
Depth	mm	240
Weight	KG	10

1.10 Environmental conditions, Ventilation and Mounting

Storage conditions	Page 50
Transport conditions	Page 50
Operational environmental conditions	0 to +45°C (32 to 113°F) at rated values +45 to 55°C (113 to 131°F) at power reduction by 2.5% / K
Humidity	Relative humidity 95%, no condensation
Installation altitude above sea level	0-2000 m without derating > 2000 m with derating of the maximum environmental temperature by 0.5 °C per 100 m
Pollution degree	2
Overvoltage category	III
Servo amplifier protection class	IP 20
Mounting position	Page 25
Ventilation	Forced ventilation with internal fan controller

1.11 Auxiliary supply voltage

The power supply mounted in the control cabinet, which provides the +24 V auxiliary and brake voltage (+24V-BR), must output a galvanically isolated protective extra low voltage (PELV) according to EN60950. Due to the start current of the electrical torque, the rated current must be at least 5A.

2 Installation

2.1 Important Guidelines

- When using a ground fault interrupter in the circuit, a type B FI-switch is required. If an FI switch of type "A" is used, A DC ground fault could cause it to malfunction. High-frequency leakage currents occur, which must be taken into consideration when selecting the FI (e.g. Schrack ID-B 4/XX/XX-B). Trigger diagram:

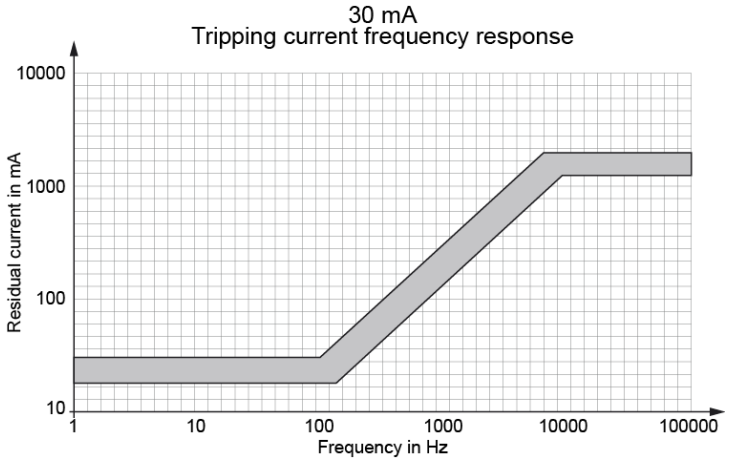

- The servo amplifier and motor must be grounded according to the guidelines. Uncoated mounting plates must be used in the control cabinet.
- The DIAS Drive must be connected to the ground terminal over a wire with a cross section of at least 10 mm² (8 AWG).
- The main power supply for the DIAS Drive requires a fixed connection. If the servo amplifier is mounted on a moving part over a connector terminal, the ground wire must have a cross section of at least 10 mm² (8 AWG) to avoid high leakage current (>3.5 mA).
- Before installation, the servo amplifier must be mechanically tested. If damage resulting from transportation is determined, for example, the amplifier cannot be used. Electronic components cannot be physically handled.
- The rated voltage and current specifications of the servo amplifier and motor must match. The electrical connection must correspond to the schematicon page 35.

- The main supply can under no circumstances exceed the rated values for the servo amplifier. Attention should be paid to "Different Power supplies" on page 3029.
- The external fuse for the main supply, the +24 V auxiliary and holding brake supply must meet the specifications for "External Fuse" on page 36.
- The motor and control cable should be laid with a minimum distance of 100 mm. This improves the effect of noise in the control cable, which is caused be the high noise generation of the motor cable . A shielded motor and feedback cable must be used, by which the shielding on both cables is applied.
- As described on page 32, the correct mounting position is vertical.
- The ventilation in the control cabinet must provide sufficiently cool and filtered air. Instructions for the "Environmental Conditions" are found on page20.
- Any post-delivery changes made to the servo amplifier, with the exceptions of parameters, invalidates the warranty.
- During the initial start-upof the servo amplifier, the peak current must be tested. Small motors can be damaged quickly, especially if the servo amplifier settings are too high (i.e. a 1A motor with a 10A amplifier without being limited to 1A)
- Note: The symbol for mass ⏚, found in all schematic plans, means that the electric connection between the indicated device and the mounting panel in your control cabinet must be made over the largest possible surface. This connection should enable the dissipation of HF noise and should not be confused with the PE symbol (EN 60204 protection) (Protective measure according to EN 60204).
- Shelf life:
  < 1 year: no limitations
  ≥ 1 year: The intermediate circuit capacitors of the servo amplifier must be reformed before the initial start up. In addition all electrical connections must be removed and the servo amplifier supplied with 230 V for 30 minutes, single phase at terminals L1 / L2.

2.2 Configuration of the Control Cabinet

2.2.1 Wiring Diagram and Pin Layout

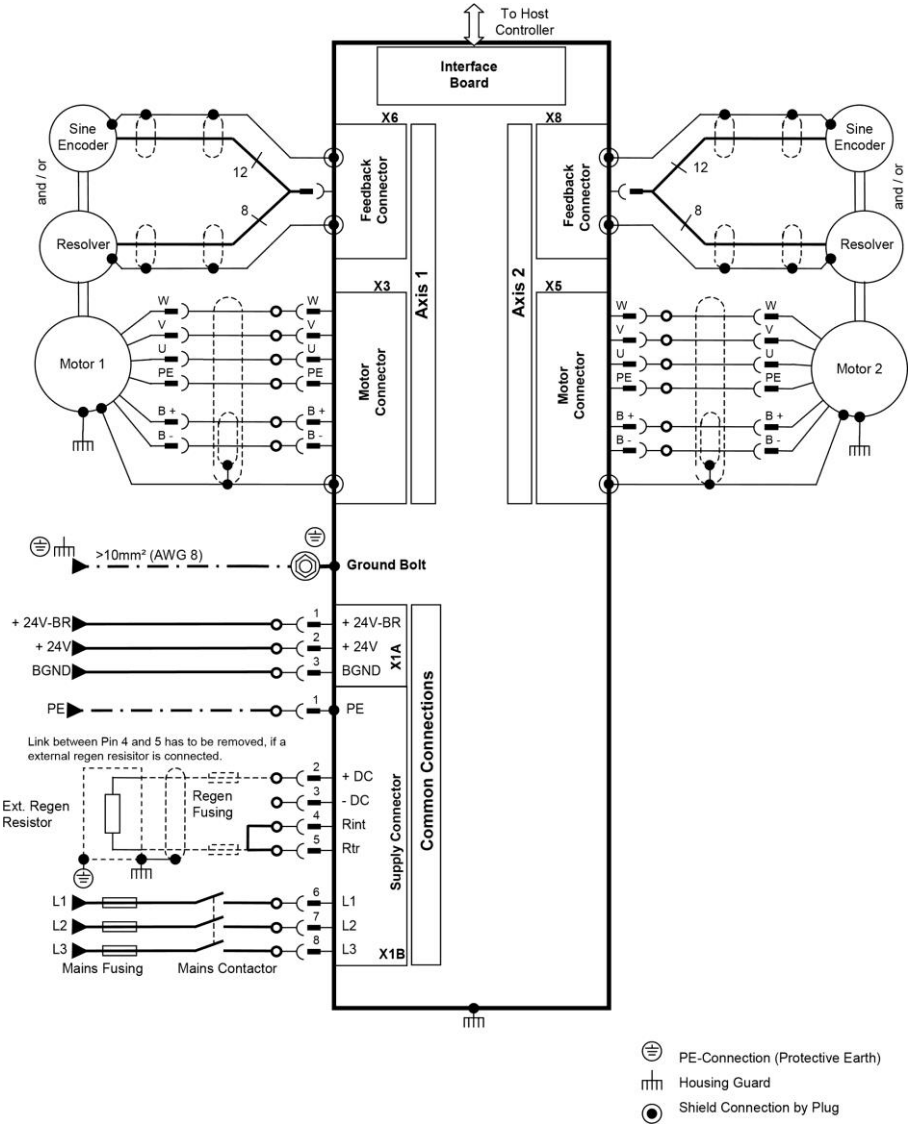

SDD 210-23

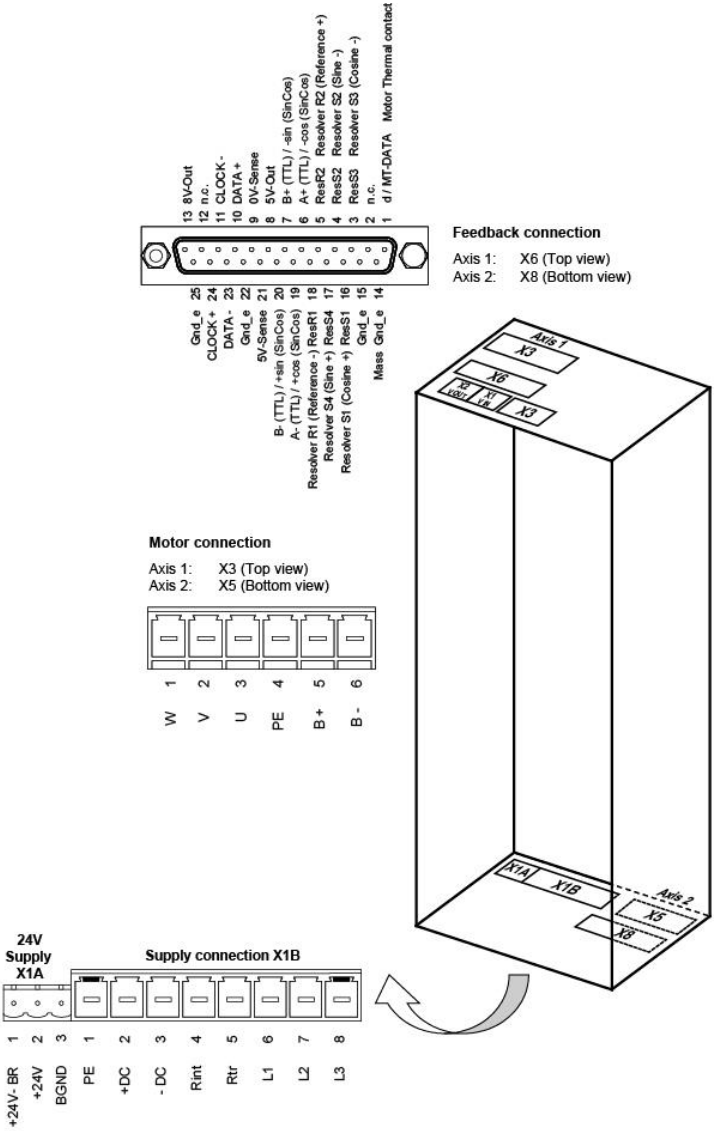

Amplifier type	Axis 1		Axis 2	
Cable	**Motor**	**Feedback**	**Motor**	**Feedback**
SDD210-23	X3	X6	X5	X8

2.2.2 Mechanical Construction and Mounting

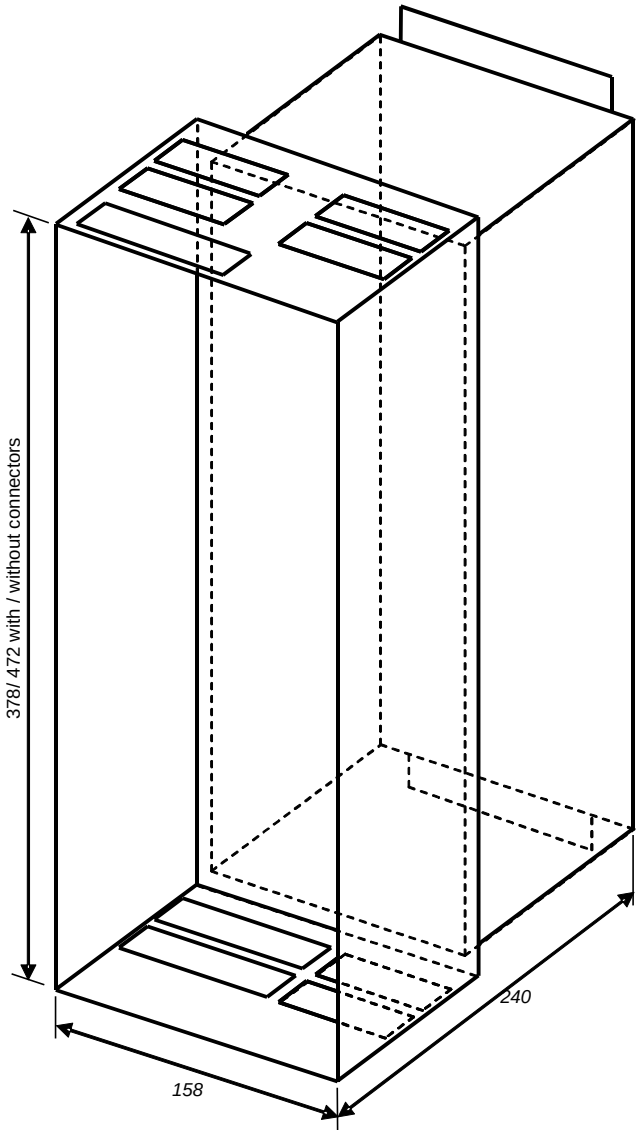

The control shows the servo amplifier dimensions .

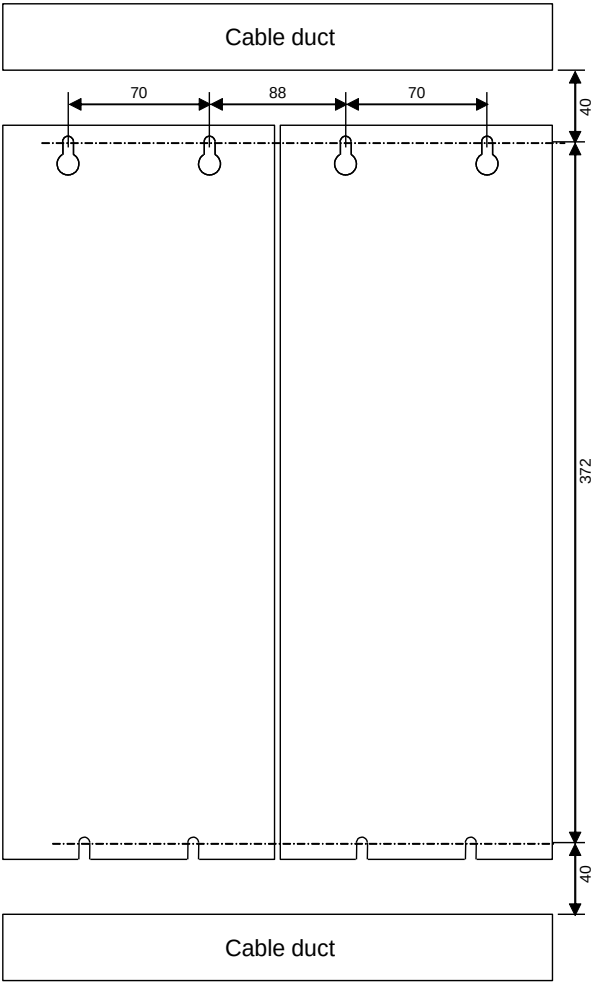

The cable channels below and above the servo amplifier must have the specified distances. This will ensure the sufficient air reaches the heat sink.

Material: 4 x M5 socket head screws DIN 912
Required tool: 4 mm socket head wrench

2.2.3 Laying the motor and control cables

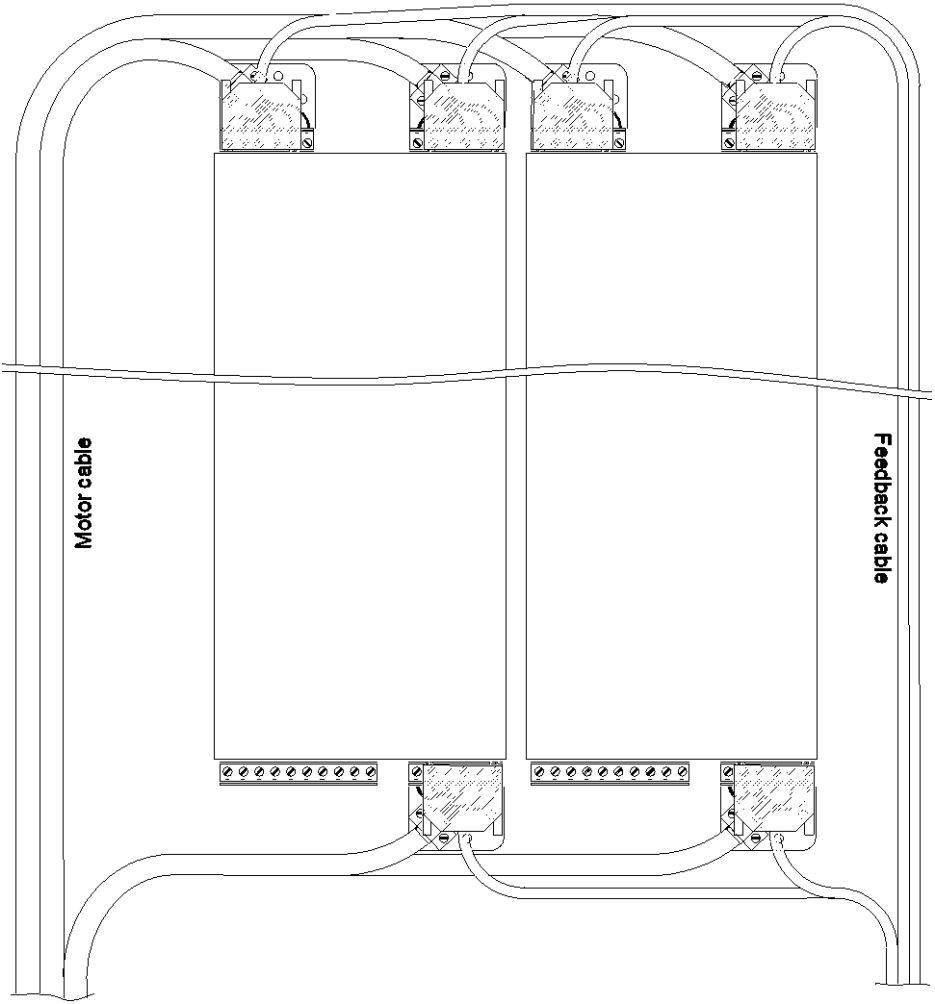

Note: the motor and control cable must be kept separate. The voltage connection to X1B should also be laid mainly in the cable channels on the left side of the control cabinet.

2.2.4 Connector Layout

All connections to the servo amplifier are plug connectors (except: grounding bolts). With this method, the cable connection is simplified and the amplifier can be more easily exchanged. In addition, the option is provided to produce prefabricated cable sets for high machine volumes.

The following is the technical data for the applicable connectors:

Connectors	Type	Allowable cross section	Max. tightening torque
X1A	Phoenix MSTB 2.5 HC/3-ST	1-2.5 mm² (14-18 AWG)	0.3 Nm (2.25 inch lb)
X1B	Phoenix PC5/8-ST2-7,62	1-4 mm² (12-18 AWG)	1.3 Nm (12 inch lb)
X3, X5	Phoenix PC5/6-ST2-7,62	1-2.5 mm² (12-18 AWG)	1.3 Nm (12 inch lb)
X6, X8	D-Sub 25 with metal housing	0.25-0.5 mm² (21-24 AWG)	Soldered or clamped
Grounding bolts	M5	10 mm² (8 AWG)	3.5 Nm (31 inch lb)

2.2.5 Cable Types

According to EN 60204 or AWG: No. 210-16 of the NEC, column 60° C or 75° C is recommended:

Signal		Cable rating
Alternating current	Maximum 4 mm² (12 AWG)	600 V,105° C (221° F)
Intermediate circuit voltage	Maximum 4 mm² (12 AWG)	1000 V,105° C (221° F)
Brake resistance	2.5 mm² (14 AWG)	1000 V,105° C (221° F)
Motor cable	Maximum 2.5 mm² (14 AWG), shielded, max. 25 m, cable capacitance <150 pF/m	600 V,105° C (221° F)
Stop brake	Min. 0.75 mm² (18 AWG), component of the motor cable, shielded separately, monitor voltage loss	600 V,105° C (221° F)
Resolver Feedback with thermo contacts	4x2x0.25 mm² (24 AWG) twisted pair, shielded, max. 25 m, cable capacitance <120pF/m	
EnDAT® Signal encoder	7x2x0.25 mm² (24 AWG) twisted pair, shielded, max. 25 m, cable capacitance <120 pF/m	
+24 V and +24 V-BR supply	Maximal 2.5 mm² (14 AWG), (check voltage loss)	

Note: Use 60/75 °C Copper conductors only!

2.2.6 External Fuse

The AC and 24V fuse are designed according to the customer requirements for the circuit.

Signal	Fuses, inertia
AC voltage supply (L1-L3)	The size of the fuse depends on the average power consumption of the connected amplifier. Max. 20 A with 4 mm^2 (12 AWG) (FRS-25) wires
24 V DC input (24 V, 24 V-BR)	16 A inertia with 2.5 mm^2 (14 AWG) for the control
External brake resistance	10 A time delay, 1200V (e.g. SIBA 10 022 01, 3-pin, D-Fuse-Link) or FRS-10

UL Requirement:

Suitable for use on a circuit capable of delivering not more than 5000 rms symmetrical amperes, 528 volts maximum when protected by RK5 class fuses rated 20A.

Integral solid state short circuit protection does not provide branch circuit protection. Branch circuit protection must be provided in accordance with the Manufacturer Instructions, National Electrical Code and any additional local codes.

2.2.7 Voltage Supply Options

The main voltage supply for the DIAS-Drive requires a fixed connection. If the servo amplifier is mounted with a connector terminal to a moving machine part, the ground connection must have a cross section of at least 10 mm² (8 AWG) to avoid the high residual current (>3.5 mA).

When using a ground fault interrupter in the circuit, a type B FI-switch must be used. If a type "A" FI-switch is used, A DC ground fault could cause a malfunction.

Power supply (non grounded)

The servo amplifier can be connected directly to a supply voltage with a the grounded terminal without galvanic isolation.

Non grounded power supply

If the servo amplifier is operated in a non-grounded system (IT network), the danger of over voltage or damage exists.
The following measures can be taken to provide protection against over voltage :

- Use of a galvanically isolating transformer with an grounded star point on the secondary side. This offers the highest protection.
- Over voltage protection installed in the voltage supply of the control cabinet.

The servo amplifier is tested according to EN 61800 as follows:

- Periodic over voltage between phase conductors (L1, L2, L3) and the amplifier housing cannot exceed 1000V (amplitude).
- According to EN61800, the peak voltages (<50µs) between the phase conductors cannot exceed 1000V. Peak voltages (<50µs) between the phase conductors and the housing cannot exceed 2000V.

NOTE: non-earthed main voltage supplies always required additional overvoltage protection.

Power supply

If the input supply voltage exceeds the specified maximum value, a suitable transformer is required to reduce it.

2.2.8 Using Cooling Devices

The Servo amplifier functions up to an ambient temperature of 45° C (55° C with reduced power). Under some circumstances, a cooling device is required.

NOTE: A cooling device always produces condensation water. The following points must therefore be observed:

- Cooling units must be mounted in such a way that no condensation water can drip into the control cabinet.
- Cooling units must be mounted so that condensation water is not distributed over electrical or electronic components.

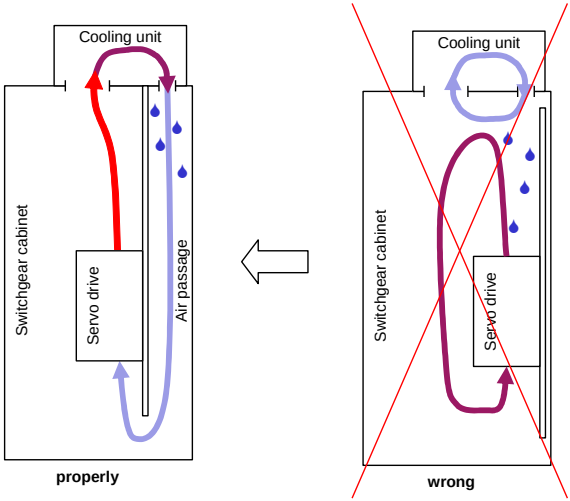

Cooling device mounted in the top of the control cabinet

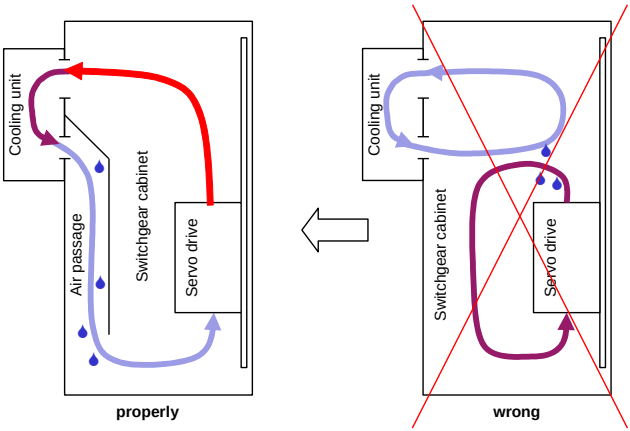

Cooling device mounted in the cabinet door

Condensation water can also be avoided as follows

- The switch point of the temperature regulator should be just below the building temperature.
- In damp environments, the proper seals should be used in the control cabinet.
  If electronic components are colder than the air in the control cabinet, condensation water can form; especially when the cabinet door is opened during servicing.

2.2.9 Turn on/off response of the servo amplifier

The turn on/off response of the servo amplifier is shown below.

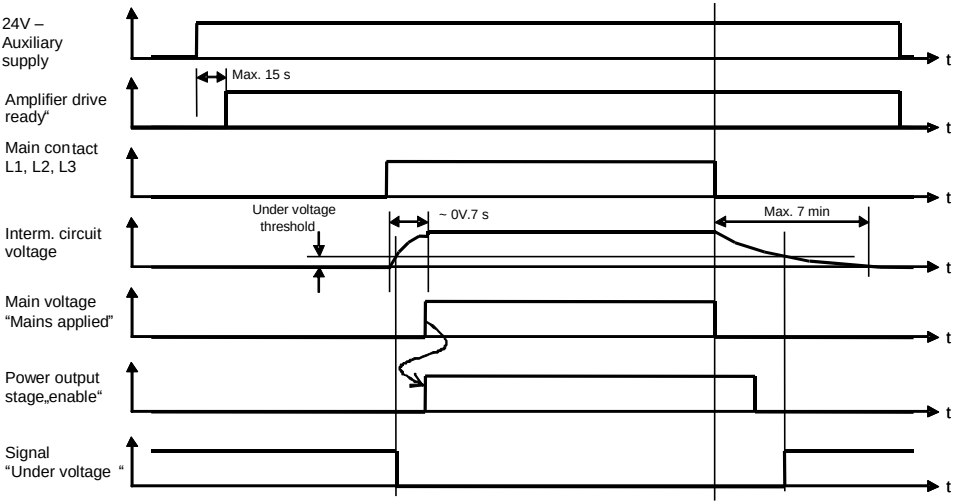

5 seconds after being turning on the 24 V auxiliary supply (start time of the micro controller), the "Drive ready" signal is set to high.

The above image shows when the 24 V auxiliary supply activates the system by turning on the main switch and the main supply is later engaged. This, however, is not absolutely necessary. The main supply can also be activated with the 24 V auxiliary supply at the same time.

Since the servo amplifier has volatile memory, parameters received must be stored in the host controller. The advantage here is in the automatic download of program data when an amplifier is exchanged.

If the main supply is turned on, the capacitors in the intermediate circuit are loaded. Approximately 0.7 seconds are needed.

If the main supply is turned off, the current of intermediate circuit is maintained and can be used for controlled braking of the motor. If the motor is slowed, the energy is returned to the intermediate circuit.

If the motor is stopped, the "enable" signal can be removed. After 5 minutes, the intermediate circuit is discharged.

2.2.10 Stop Brake Control

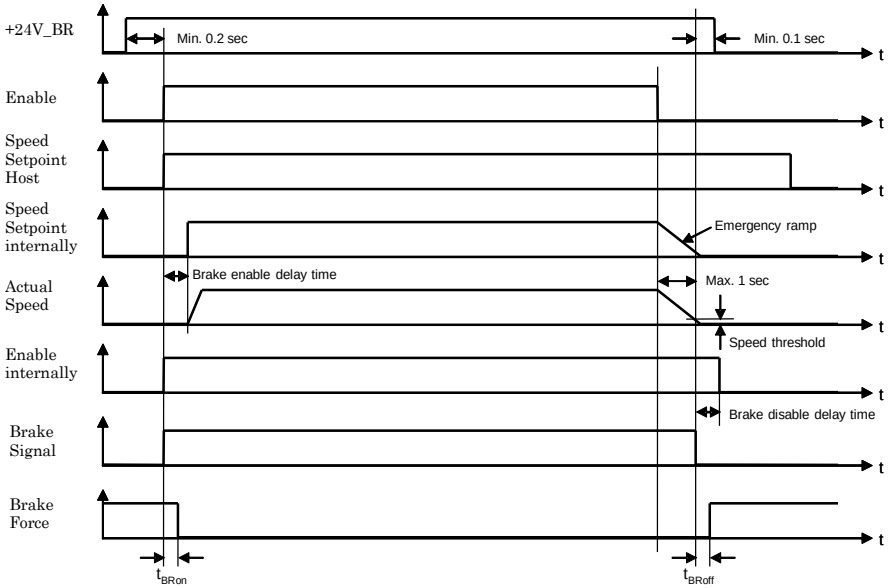

The diagram above shows the stop brake function.

A standard stop brake with 24 volts DC and a maximum of 2 Amps can be used on the servo amplifier.

The circuit has high function reliability, but provides no protection for personnel.

3 Connections

3.1 Main Power supply (X1B)

The connection to the main supply voltage is designed for voltages from 230 V to 489 V AC. When using a non grounded supply, over voltage protection must be built into the main power supply of the control cabinet.

Note: In case that more than one servo drive is connected to a common DC-link, they must also be connected to common input voltage in order to enable power sharing.

3-phase connection:

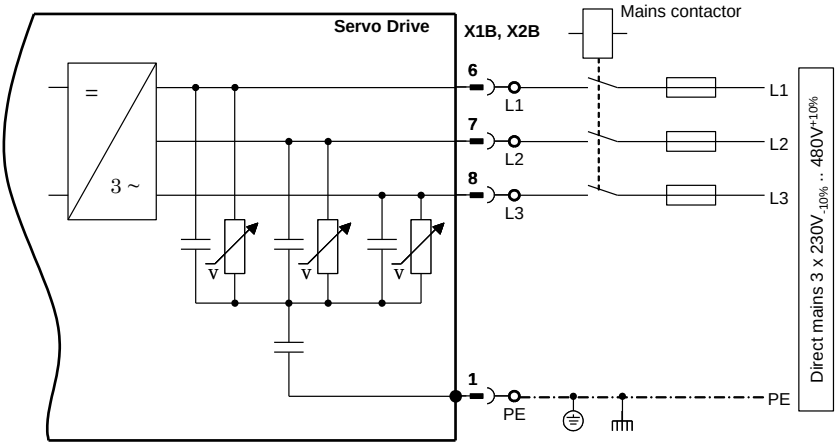

3.2 24 V Auxiliary supply – Stop Brake Supply (X1A)

If a 24 V supply is used in the control cabinet to power the relays, coils or other devices, it can also be used for the servo amplifier (the maximum current of the supply must be taken into consideration).
To deactivate the stop brake independently from the 24 V auxiliary voltage, the amplifier has an additional input +24V-BR.

Note: The mass of the 24 V power supply must be connected to ground near the supply.

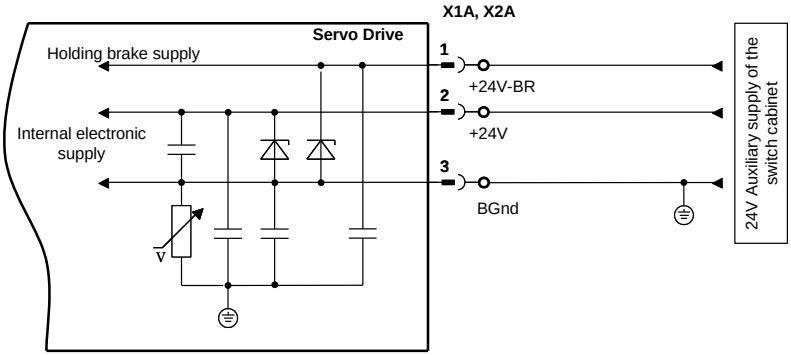

3.3 DC-link (X1B)

To bridge the intermediate circuit voltage with other servo amplifiers, the X1B/2 (+DV) and 3 (-DC) connectors can be used.
The power from the intermediate circuit of different servo amplifiers can be distributed using the method.

Note: If the intermediate circuit is bridged within a group of amplifiers, the main power supply in this group must also be bridged.

3.4 External brake resistance (X1B)

If the power of the internal brake resistor is insufficient, an external resistor can be added. Here, the connection between R_{int} (terminal 4 of X1B) and R_{tr} (terminal 5 of X1B) must be removed. The external resistor is connected to terminal 2 and 5 of X1B. The fuse on both connections of the external brake resistor is mandatory. 1000 VDC fuses with slow trigger characteristics must be used.

Note: The stop brake resistor fuse does not protect the resistor, rather the connected cable in the event of a short circuit. The amplifier has electronic protection for the brake resistor.

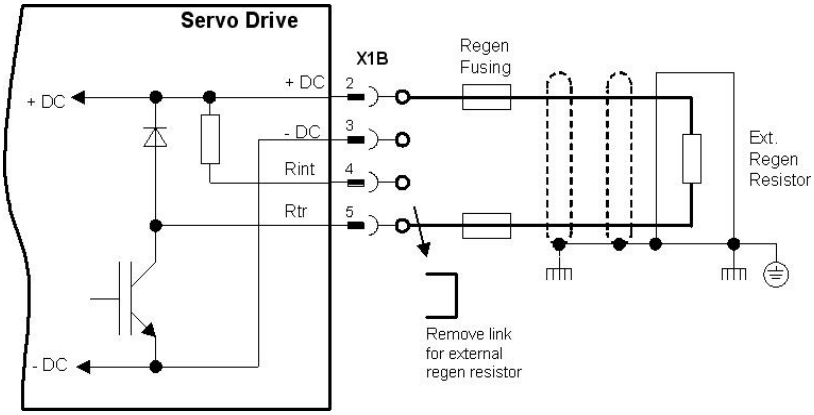

3.5 Motor connections (X3, X5)

3.5.1 Standard configuration

The cable length for the motor is limited to 25 m. If a longer cable is used, additional suppression coils in the motor output are required.

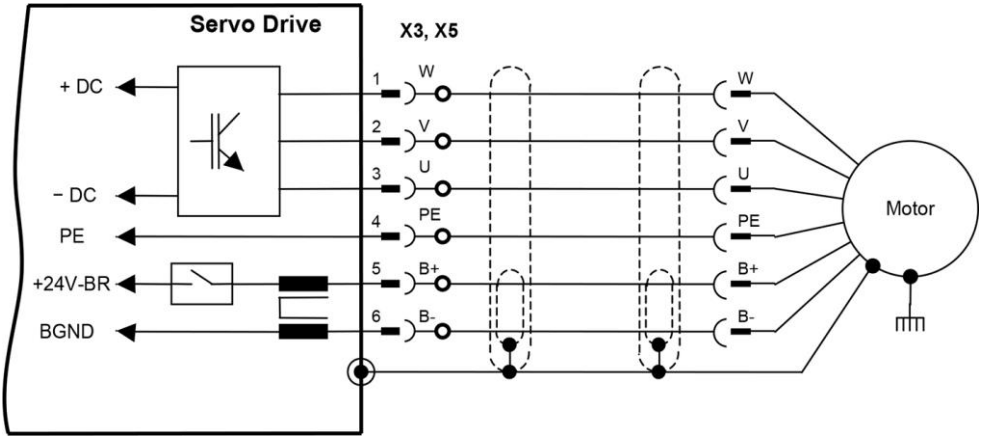

3.5.2 Classic Emergency-Stop (Stop-Category 0)

The cable length for the motor is limited to 25 m. If a longer cable is used, additional suppression coils in the motor output are required.

Note: The KEM coil must be turned on before the amplifier is enabled and can be turned off after at least 1 ms after the amplifier is "disabled.

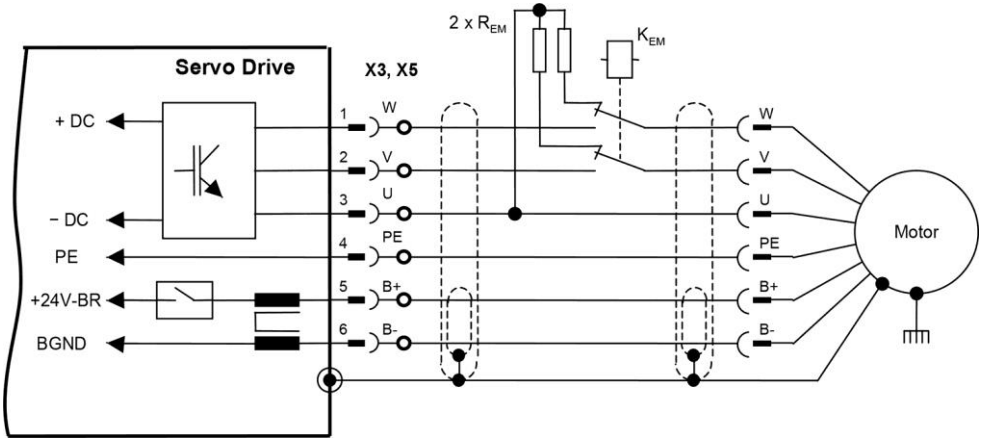

The resistance value and the power of the R_{EM} resistor are calculated using the following formulas:

$$R_{EM}[\Omega] = \frac{\max SPEED \cdot K_{Erms}}{I_{\max} \cdot 0.8} \qquad P_{EM}[W] = \frac{(I_{\max} \cdot 0.8)^2 \cdot R_{EM}}{10}$$

maxSPEED	Maximum revolutions [RPM]
I_{max}	Maximum motor current allowed [A]
K_{Erms}	Voltage constant of the motor [V*min]

3.5.3 Personnel-Safe Stop Brake Control

The servo amplifier has high brake control reliability.

If a personnel-safe stop brake control is required, an additional safety contact in the +24V-BR voltage path is needed that complies with safety standards.

Despite this, a mechanical defect in the stop brake can pose a danger of injury and/or damage to the machine.

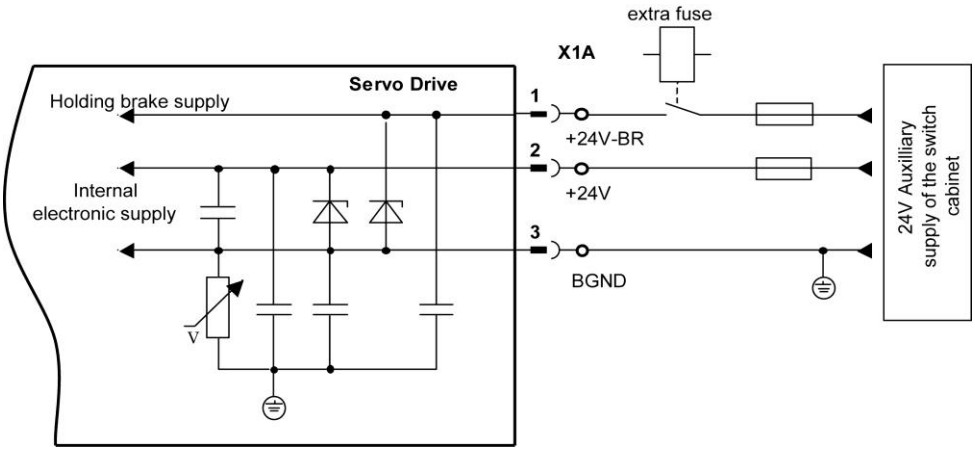

3.6 Feedback (X6, X8)

The servo amplifier has various feedback inputs for different feedback devices.

- Resolver Feedback with thermo contacts
- EnDAT® encoder (single and multiturn)
- Hiperface® encoder (single and multiturn)
- Sin/Cos & TTL Encoder

For EnDAT, Hiperface, Sin/Cos and TTL a maximum number of 8192 feedback signals per mechanical rotation is supported (M-RPULSE).

3.6.1 Resolver Feedback

A Resolver is used as the standard feedback. The Servo amplifier supports the analysis of single-speed (2-pin) and multi-speed Resolvers (up to 32 pins). The maximum cable length is 50 m. If a thermo contact is used, the signal is also wired into the Resolver cable.

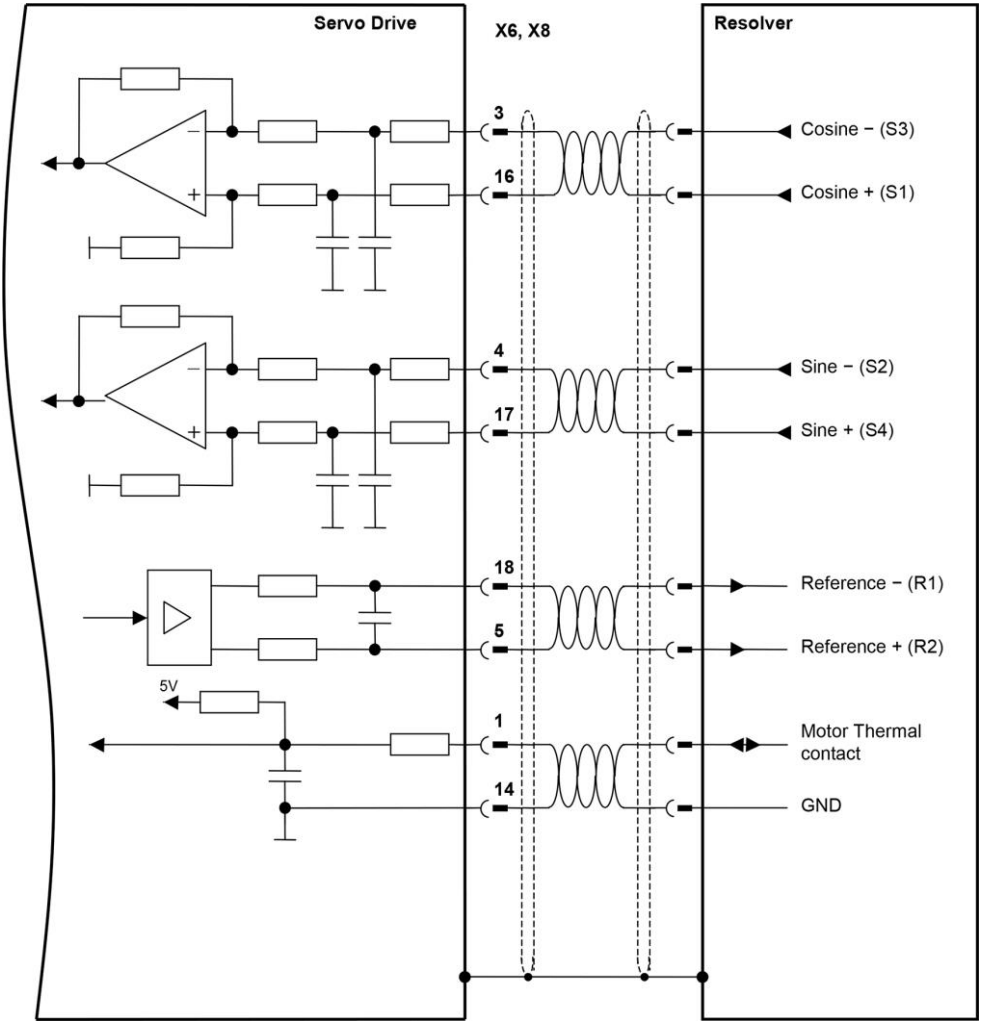

3.6.2 EnDAT® Signal Encoder

One of the high resolution feedback systems for servo motors is the encoder with EnDAT interface. The cable length is limited to 25 m. If a thermo contact is used, the signal is transmitted through the feedback cable.

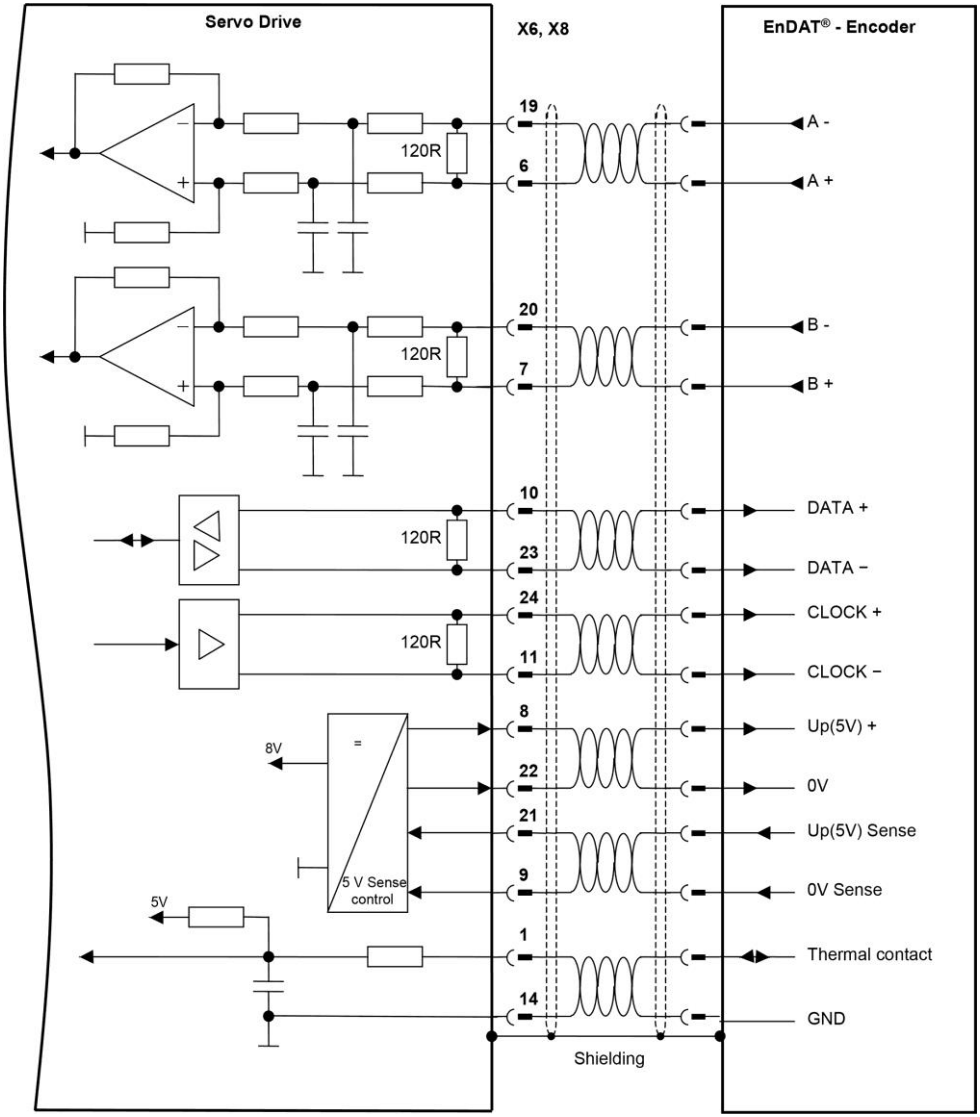

3.6.3 Hiperface® Signal Encoder

The signal encoder with a Hiperface® or ® Interfaceis a high-resolution feedback system for motors. The cable length is limited to 25 m.

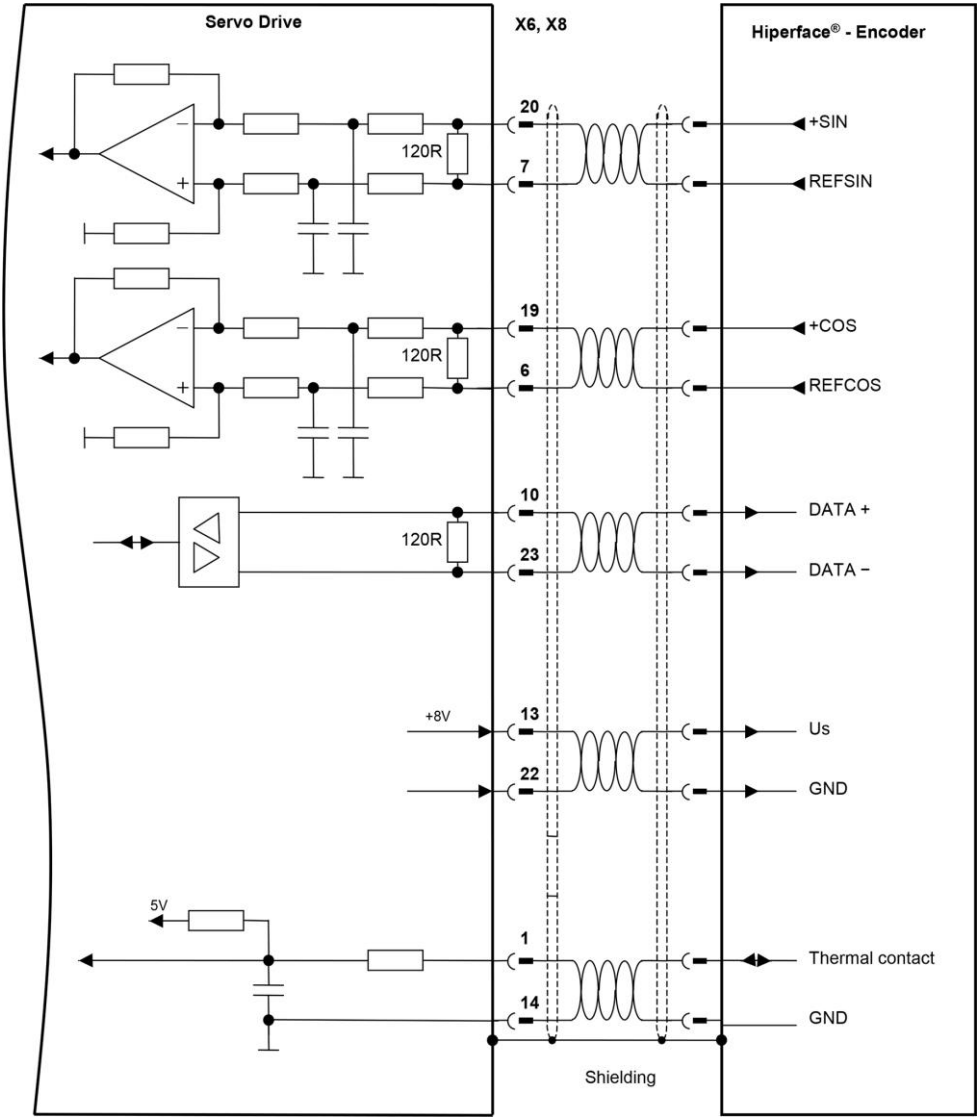

3.6.4 Sine/Cosine & TTL Encoder feedback

A sine encoder is a high-resolution feedback system, used with linear or torque servomotors. The maximum cable length is limited to 10 m. If a thermal contact is used in the motor, the signal is also connected via the encoder cable.

The upper frequency limit for TTL encoders is 100 kHz. The reference signal is not evaluated in the drive.

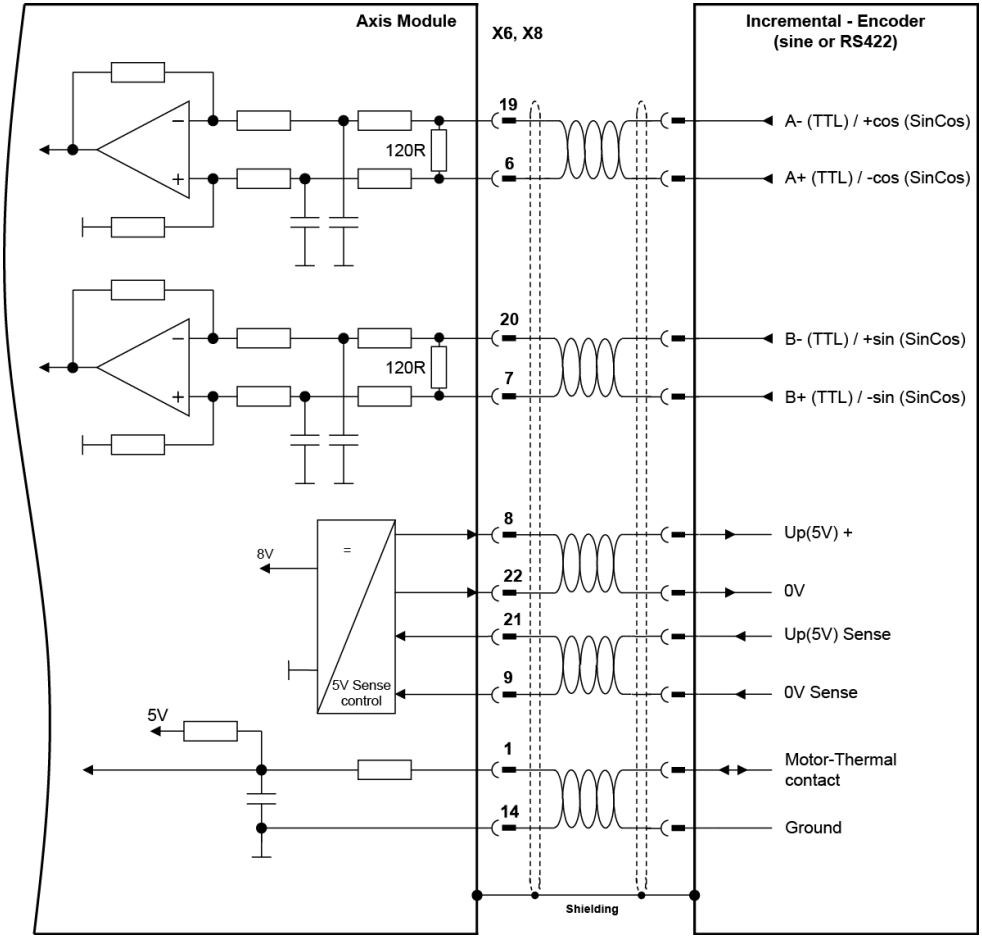

4 Maintenance

The servo amplifier is maintenance-free.

Note: Opening the housing results in the loss of warranty.

Dirt on the housing can be removed with isopropyl alcohol or similar products.

- Contamination in the device must be removed by the manufacturer.
- Dirty fan grates can be cleaned with a dry brush.
- Spraying or submerging is not recommended.

4.1 Exchange and Repair

Repair: of the servo amplifier must be performed by the manufacturer.

Exchange: If a servo amplifier must be exchanged, the following points must be observed (no special tools required):

Turn off the control cabinet supply and remove the servo amplifier fuses.

↓

After disconnecting the servo amplifier from the main voltage supply, a waittime of 5 minutes is required before current-conducting components in the amplifier (i.e. contacts) can be touched or connectors removed. Capacitors can contain dangerous voltages for up to 5 minutes after the supply voltage is removed. It is recommended to wait until the voltage in the intermediate circuit is below 40 V.

↓

During operation, the heat sink of the servo amplifier can reach temperatures of over 80° C (176° F). The heat sink temperature should be checked before handling and it may be necessary to wait until it is below 40° C (104° F).

Disconnect the plug contact. The connectors should be labeled to avoid confusing them later.

↓

The servo amplifier can be dismantled.

↓

The replacement unit must be compared with the original amplifier; only identical amplifiers can be used.

↓

Reestablish the connection. The connectors must not be crossed.

↓

Insert the fuse for the servo amplifier, turn on the main switch in the control cabinet.

↓

Check whether the correct parameters where loaded into the amplifier.

5 Appendix

5.1 Transport, Storage and Disposal

Transport:

- For transport, the original recyclable packaging from the manufacturer must be used.
- During transport dropping should be avoided.
- The storage temperature must be between –25 to +70° C (-13...158° F), changes max. 20 K/h.
- The maximum humidity s 95%, non-condensing.
- The servo amplifier contains electrostatic-sensitive components, which can be damaged by improper handling. Before touching the servo amplifier, the user must discharge their body by touching a grounded object with a conductive surface. Contact with highly insolated material (synthetic fiber, plastic foil etc.) must be avoided. The servo amplifier must be placed on a conductive surface.
- If the packaging is damaged, the amplifier must be visually inspected for damage. If damaged, the transport company and the manufacturer must be informed. The amplifier should not be installed and operated if damaged.

Packaging:

- Recyclable cardboard with liner
- Dimensions: 500mm x 300mm x 400mm (width, Height, depth)
- Identification: device type label on the outside of the carton

Storage:

- Only the original recyclable packaging from the manufacturer can be used.
- The servo amplifier contains electrostatic-sensitive components, which can be damaged by improper handling. Before touching the servo amplifier, the user must discharge their body by touching a grounded object with a conductive surface. Contact with highly insolated material (synthetic fiber, plastic foil etc.) must be avoided. The servo amplifier must be placed on a conductive surface.

- A maximum of 6 servo amplifiers can be stacked on top of one another.
- The storage temperature must be between –25 to +70°C (-13...158°F), change max. 20K/h.
- The maximum humidity is 95%, non-condensing.
- Shelf life:
  < 1 year: no limitations
  ≥ 1 year: The intermediate circuit capacitors of the servo amplifier must be reformed before the initial start up. In addition all electrical connections must be removed and the servo amplifier supplied with 230 VAC, single phase at terminals L1 / L2.

Disposal:

- The servo amplifier can be disassembled by removing the screws in its main components (heat sink, steel housing, circuit boards).
- Disposal should be carried out by certified companies.

5.2 Correcting Errors

Errors and warnings are indicated by LEDs and displayed over the bus system.
On page 53 under "Status Register", the various errors that can occur are described.

5.2.1 LED Display

The DIAS-Drive DIAS-Driveshows the actual amplifier status through two LEDs

LED		Description
Green	**Red**	
On	**On**	Controller in boot mode (Firmware damaged or nonexistent)
1Hz blink signal	**off**	Ready to start
8Hz blink signal	**off**	Output current is limited by the I2T limit (one or more axes)
On	**off**	Operation
On	**1Hz blink signal**	Warning
off	**On**	Error

5.2.2 Amplifier Malfunctions

Amplifier Malfunctions	Possible Causes:	Solution
– **When the motor is turning in the clockwise direction (observe the motor shaft) I-FPOS is reduced**	– Resolver does not function correctly – Resolver connected incorrectly	– Check Resolver – Connect Resolver according to schematic (Page22)
– **Motor does not turn** – **Motor current reaches limit, however, without torque**	– Resolver does not function correctly – Resolver connected incorrectly	– Check connections on motor terminal board U, V, W
– **The Motor "spins through"** – **The torque is too low or different in the directions**	– Resolver does not function correctly – Resolver connected incorrectly	– Check the ***M-ROFF*** parameter – Check the motor and feedback connection
– **Motor stops in specified positions**	– Resolver does not function correctly – Resolver connected incorrectly	– Check the ***M-POL*** and ***M-RPOL*** parameters corresponding to the motor data. – Exchange the motor cable(especially with drag chains) – Check motor cable connections
– **The motor oscillates**	– Resolver does not function correctly – Resolver connected incorrectly	– Reduce V-KP and/or P-KV – Check the feedback cable and exchange it if needed. (Especially with drag chains)

5.2.3 Status Register

With I-STATUS, the status of the DIAS-Drive can be read. In a 32-bit variable, all error and status information is contained. The amplifier response can be changed by setting the appropriate bits in the G-MASKE1, G-MASKE2, G-MASKW and G-MASKD functions.
According to the mask settings, the amplifier detects errors, warnings or does respond. The individual bits have different values and limitations in the mask assignments.

Bit	Error	Cause	Solution
0	**Single-phase operation**	— The main voltage supply is single phase only	— Check the amplifier fuse — Check electrical connection
1	**Error in the main voltage supply**	— Amplifier is "enabled" without the applied main voltage supply	— Check in main supply fuse — Check electrical connection — Amplifier is enabled before the intermediate circuit is loaded
2	**Reserved**		
3	**DC over voltage**	— Internal/external brake resistor not connected — Internal brake resistor defective — External brake resistor defective	— Connect brake resistor — Exchange the amplifier — Exchange the brake resistor
4	**DC under voltage**	—The main voltage supply for the released amplifier is too low	— Disable the amplifier before the intermediate circuit voltage. Below G-VBUSM
5	**Reserved**		
6	**Stop brake error**	— No stop brake connected with parameters ***M-BRAKE*** = 1 — Stop brake short circuited lines — Stop brake short circuited	— Motor used with stop brake — Check stop brake cable — Change ***M-BRAKE*** parameter to 0 as long as a motor without brakes is used. — Check connector and motor cable —Check stop brake

7	**Brake switch error**	— Defective internal stop brake switch — No stop brake connected with parameters ***M-BRAKE*** = 1	— exchange the amplifier — Motor used with stop brake — Change ***M-BRAKE*** parameter to 0 as long as a motor without brakes is used. — Check connector and motor cable —Check stop brake
8	**Reserved**		
9	**Motor temperature**	— Motor temperature switch is triggered — Cable or connector break in feedback	— Check cause (Motor too small, poor environmental conditions) — Check feedback cable and connector, exchange if necessary
10	**Ambient temperature**	— Internal temperature too high	— Improve control cabinet ventilation, check mounting position and compare it with the specifications of this instructions.
11	**Heat sink temperature**	— Heat sink temperature too high	— Improve control cabinet ventilation, check mounting position and compare it with the specifications of this instructions
12	**Feedback error**	— Feedback cable broken — Feedback defective — Bad feedback connection	—Check feedback cable and replace if necessary — Exchange feedback — Check feedback connection
13	**Commutation error**	— Incorrect motor phase position — Incorrect motor connection or wrong feedback cable	— Check the ***M-ROFF*** parameter — Check motor connection
14	**Motor over speed**	— Incorrect motor phase position — Incorrect motor connection or wrong feedback cable — Overshoot (greater than 1.2 * ***V-NMAX***)	— Check ***M-ROFF*** — Check motor connection — Check feedback cable — Optimize controller circuit
15	**Drag error**	— P-PEMAX drag error window too small	— Increase P-PEMAX and/or optimize controller circuit
16	**Trajectory error**	— The speed setting, which was calculated using the change in the position set value by the host results in more than 10000 min^{-1}	— Check ***P-PSCALE*** and ***P-SSCALE*** parameters and the reference value

17	**Host communication**	— No new values were transmitted for two successive cycles — Internal communication error with the interface	— Synchronization is not engaged, check A-CTIME and the cycle time of the control — Check A-STIME — Communication interrupted, check — see also I-DERROR
18	**Amplifier error E2 (*I-DERROR*)**	— Various internal errors	— see also ***I-DERROR*** — Contact manufacturer
19	**Amplifier error E1 (*I-DERROR*)**	— Various internal errors	— see also ***I-DERROR*** — Contact manufacturer
		Power output error: — Motor cable has a ground fault — The motor has a ground fault — Output stage defective	— Check motor cable, exchange if necessary — Exchange the motor — Exchange amplifier
		Ballast circuit error — Ballast cable has a ground fault — Ballast resistor has a ground error — Ballast output defective	— Exchange ballast cable — Exchange ballast resistor — Exchange amplifier
20	**"Enable locked" error**	— The amplifier is "enabled" in the software when one of safety inputs still has "low" a signal.	— Enable amplifier only if ENABLE and EN-BRAKE are "high".
21	**Driver voltage error**	— The amplifier is "enabled" in the software when "Lock" still has a signal.	— Enable the amplifier only if the LOCK signal is "high".
22	**DC over voltage and brake resistance limit reached.**	— Brake resistance power is insufficient. Brake resistance power has been reached and the resistor was deactivated.	— An external brake resistor must be used to adjust the value of ***G-MBAL***.
23	**Brake supply error:**	— Stop brake voltage 24V-BR missing. — Stop brake switch defective.	— If the motor has a stop brake, the amplifier can only be "enabled" when 24V-BR is applied to the stop brake. — Exchange amplifier
24	**Reserved**		
25	**I2t error**	— I-I2T has exceeded the warning value A-I2TERR .	— Increase A-I2TERR.
26	**Motor temperature warning**	— I-TEMPM has exceeded the warning value A-TEMPMW.	— Increase A-TEMPMW.

27	**Motor parameter error**	— For motors with EnDAT® or HIPERFACE® encoders, no M - parameters were found in the encoder.	— Encoder was not loaded with M - parameters. — Encoder defective. — Signal lines or connector defective, incorrectly wired or there are breaks in the cables.
28	**Multiturn error**	— For EnDAT® or HIPERFACE® Multiturn encoders, an error has occurred during the extension to >4096 turns.	— Motor with a multiturn encoder was exchanged — Encoder defective.
29	**Total power limit reached**	— The power of all axes has exceeded the maximum load.	Reduce load — Drive power too low
30	**Reserved**		
31	**Reserved**		

6 DIAS Drive Accessories

6.1 Shielding Plate with Strain Relief

(Article number: 09-501-101-Z1)

The shielding plate with strain relief serves for the protection of the cable of the DIAS Drive.

Included in delivery are:

1 pcs. Strain relief
(mounting on the upper side of the DIAS Drive)

2 pcs. Allen screws
Type M5

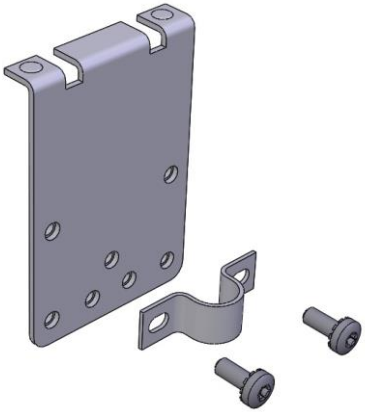

6.1.1 Mounting Instructions

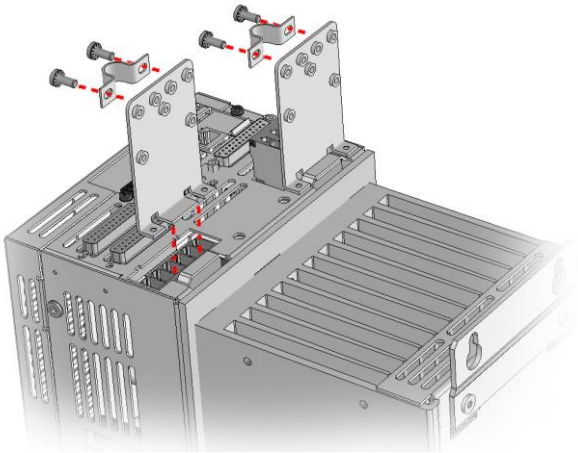

Remove the according connector. Stick the strain relief into the according slot recesses. The plugged in connector then holds the strain relief in position.

Guide the cable through the clamp and fix it on the strain relief with two screws.

6.2 Mounting Set

(Article number: 09-501-101-Z2)

The mounting set serves as a mount in the control cabinet for the DIAS Drive. The position of the drive's fan block is located on the outside of the control cabinet (better ventilation). The appropriate clearance in the control cabinet must be provided.

Included in delivery are:

2 x Mounting Brackets
(mounting on the upper or lower side of the DIAS Drive)

4 x Allen screws
Type M5

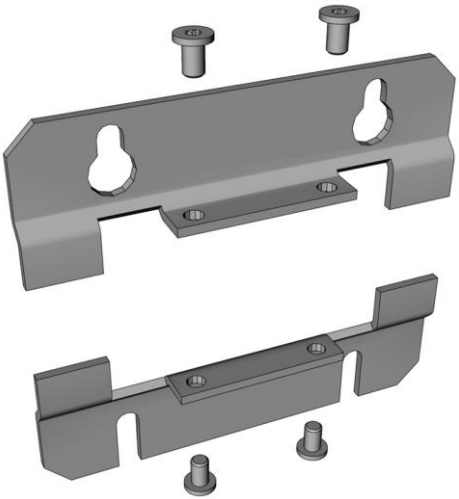

6.2.1 Mounting Instructions

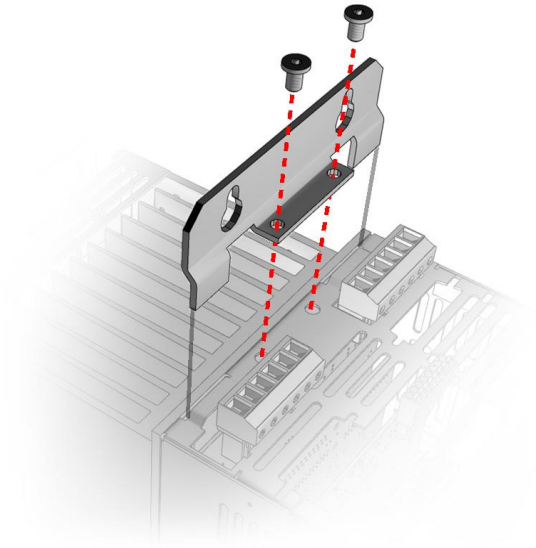

Mounting on the
upper side of the drive.

Place the mounting bracket in the provided slots and secure both screws.

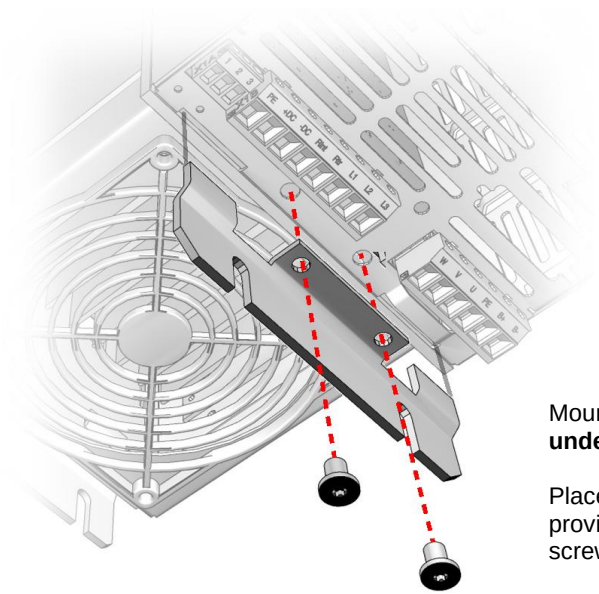

Mounting on the
under side of the drive.

Place the mounting bracket in the provided slots and secure both screws.

6.3 Dimensions

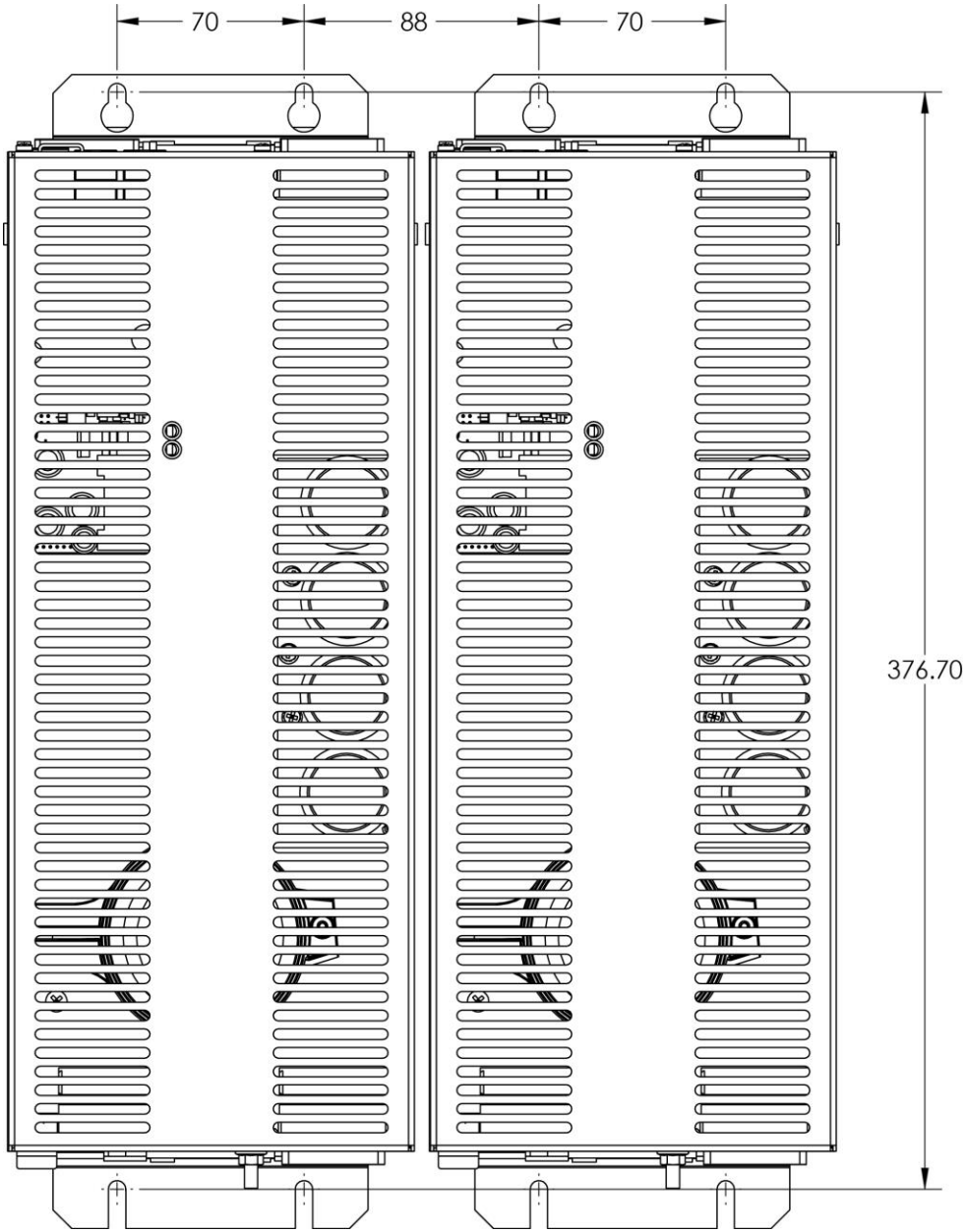

7 VARAN Interface for the DIAS Drive 3xx (VAC 013)

This VARAN interface module is used for communication between a DIAS drive and a control over the VARAN bus. It is integrated into the DIAS Drive.

It contains the safety functions SS1 (Safe Stop 1) (stop category 1 according to EN60204) for safely shutting down the amplifier and the "safe restart" STO (Safe Torque Off).

In addition, it contains the interface for digital inputs that can be used as a fast position-latch input.

Through the VARAN-Out port, the VARAN bus can be configured in a linear structure.

7.1 Technical Data

General

Interface connections	1 x VARAN-In (RJ45) (maximum length: 100 m) 1 x VARAN-Out (RJ45) (maximum length: 100 m) 1 x DIAS-Drive interface (26-pin blade terminal) 4 fast digital inputs 2 safety inputs for the SSI (SAFE Stop 1) and STO (SAFE Torque Off) safety functions.

Electrical requirements

Supply voltage	+5 V DC (supplied by the DIAS-Drive)	
Current consumption of the voltage supply	Typically 400 mA	Maximum 500 mA

Input specifications

Number of inputs	Digital inputs (D-IN1 to D-IN4)	Safety inputs (ENABLE_L and ENABLE_H)
Input voltage	Typically +24 V, maximal +30 V	Differential voltage between ENABLE_H (+) and ENABLE_L (-) typically 24 V, maximum 30 V
Signal level	Low: ≤+5 V, High: ≥+15 V	-
Switching threshold	Typically +9 V	Differential voltage between ENABLE_H (+) and ENABLE_L (-) typically 24 V, maximum 30 V Low < +6 V, High > +14 V
Input current	10 mA at +24 V	
Input delay	Typically 0,1 ms	Turn-on circa 20 ms, Turn-off 0.5 s to 1 s

Relay specifications

Number of relays	1 x Relay output (contacts S3, S4)
Relay types	1 x normally open
Power supply	+24 V DC
Switching time	<10 ms
Switching range	Max. 30 V DC/ min. 100 µA, max. 0.5 A
Switching power	Max. 42 V AC / min. 100 µA, max. 0.5 A

Intended only for connection to an isolated secondary power supply rated 24 VDC. Fuse in accordance with UL246 rated max. 4A must be connected between the power supply and device terminal.

Safety conformity

Safety Integrity Level according to IEC EN 62061	SIL 3	
Performance Level according to EN ISO 13849-1	PLe	
Probability of failure per hour	PFH_D [10^{-9}]	0,3
Mean time to dangerous failure	$MTTF_D$ symmetrized [Years]	High
Proof Test Interval [Years]	20	

Miscellaneous

Article number	16-059-013
Hardware version	2.x
Standardization	UL (E336350)

Environmental conditions

Storage temperature	-20 – +85 °C	
Operating temperature	0 … +45 °C with derating up to 55 °C, see chapter 1.10	
Humidity	0 - 95 %, uncondensed	
EMV stability	Tested in the DIAS Drive according to EN61800-3	
Shock resistance	EN 60068-2-27	150 m/s²
Protection Type	EN 60529	IP 20
Pollution degree	2	

7.2 Mechanical Dimensions

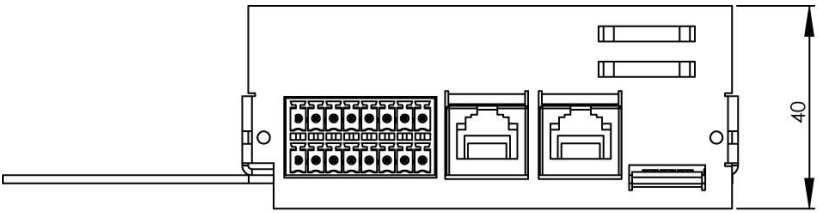

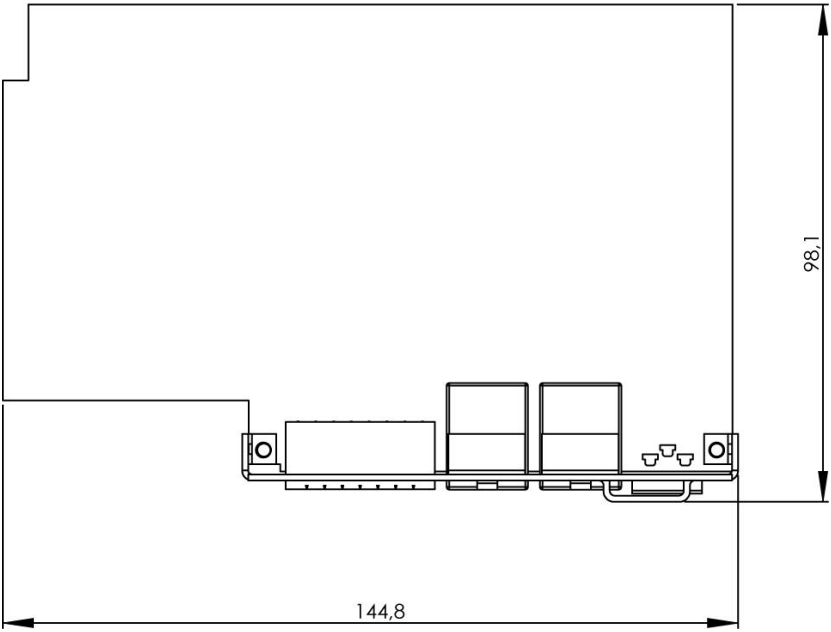

Integrated into the SDD3xx servo amplifier

7.3 Connector Layout

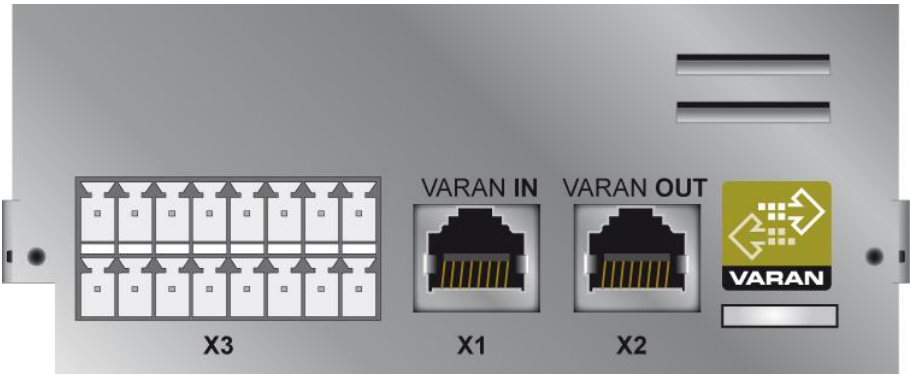

X1: VARAN-In

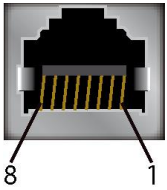

Pin	Function
1	TX/RX+
2	TX/RX-
3	RX/TX+
4 – 5	-
6	RX/TX-
7 – 8	-

X2: VARAN-Out

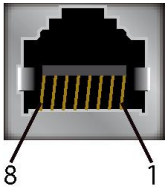

Pin	Function
1	TX/RX+
2	TX/RX-
3	RX/TX+
4 - 5	-
6	RX/TX-
7 - 8	-

Further information about the VARAN bus can be found in the VARAN bus specifications!

X3: IO

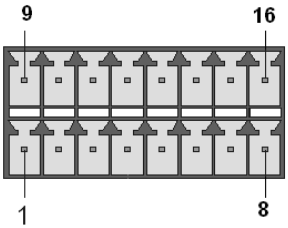

Pin	Function
1	ENABLE_L
2	ENABLE_H
3	Reserved
4	Reserved
5	Not used
6	Not used
7	S3
8	S4
9	Reserved
10	Reserved
11	Reserved
12	Ext. GND
13	D-IN 1
14	D-IN 2
15	D-IN 3
16	D-IN 4

Applicable connectors

X3: 2 x 8-pin Phoenix plug with spring terminal FMC1, 5/8-ST-3.5

For the stress relief, it is important to ensure that the minimum bend radius (eight times the cable diameter) of the cable is not exceeded!

7.4 Status Displays

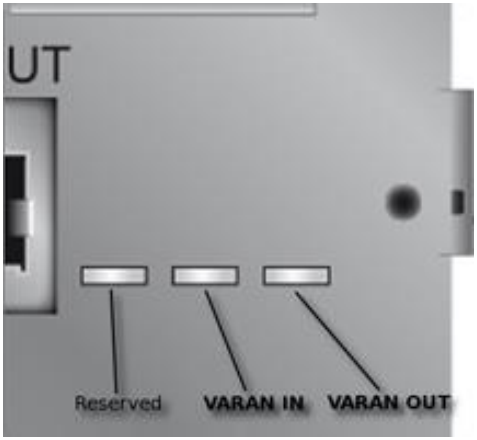

LED	LED color	Definition	
VARAN IN	Green	LINK	Lights when the connection between the two PHYs is established
	Yellow	ACTIVE	Lights when data is received or sent over the VARAN bus.
VARAN OUT	Green	LINK	Lights when the connection between the two PHYs is established.
	Yellow	ACTIVE	Lights when data is received or sent over the VARAN bus.

7.5 Additional Safety Information

The safety module "Safe Restart Lock" in an integral component of the DIAS Drive 3xx and is already installed with delivery; it meets the conditions required for safe operation according to SIL 3 in compliance with IEC 62061 and according to PL e in compliance with EN 13849-1.

Safety modules can only be powered by supplies that meet the requirements for PELV in compliance with EN60294.

Installation, mounting, programming, initial start-up, operation, maintenance and discarding of safety modules can only be performed by qualified personnel.

Qualified personnel in this context are people, who have completed training or have trained under supervision of qualified personnel and have been authorized to operate and maintain safety-related equipment, systems and facilities in compliance with the strict guidelines and standards of safety technology.

For your own safety and the safety of others, use safety modules for their designated purpose.

Designated use also applies to correct EMV installation.

Non-designated use in this context applies to

- Any changes made to the Safety modules or the use of damaged modules
- The use of the Safety modules outside of technical framework described in these operating instructions
- The use of the Safety modules outside of the technical data described in these operating instructions (see the "Technical data" sections of the respective production).

In addition, observe the warnings in the other sections of these instructions. These instructions are visibly emphasized with a symbol.

- Only qualified personnel are authorized to install the "safe restart" STO (Safe Torque off) and set the parameters.
- All control devices (switches, relays, PLC, etc.) and the control closet must meet the requirements for EN 13849 This consists of:

  – Door switches, etc. with at least IP54 protection.
  – Control classes with at least IP54 protection.
- The proper cables and end-sleeves must be used
- All cables that affect safety (i.e. control cables for the ENABLE_L and ENABLE_H inputs) must be laid in a conduit outside of the control cabinet.
  Short or crossed circuits in the signal lines must be avoided! See EN ISO 13849
- The terminal connections X3/Pin 2, Pin 4, Pin 10 and Pin 12 are labeled as reserved and cannot be laid externally!
- When using the SS1 (Safe Stop 1) safety function, the typical turn-off delay is 0.5 seconds. Subsequent actions that require the STO (Safe Torque Off) function (i.e. manual access to the machine), can only be released after 1 second.
- If external forces influence axes that are used with the STO safety function (e.g. hanging load), additional measures must be taken (such as an electromagnetic double-surface spring brake, instead of a permanent magnet brake).

Failure to follow the above safety measures can lead to severe injuries.

The main power supply for the servo amplifier must be disconnected using the main switch for the following instances:

- Cleaning, maintenance or repairs
- Extended still-stand periods

Failure to follow the above safety measures can lead to severe injuries.

7.6 Additional Information

7.6.1 "Safe Restart" STO (Safe Torque Off)

The DIAS Drive, in combination with the optional VARAN interface, supports the safety functions SS1 (Safe Stop 1) and STO (Safe Torque Off), and meets the requirements for Category 4 Performance Level "e" according to EN ISO 13849-1 and SIL3 according to EN 62061.
For his purpose, the servo amplifier has two safe inputs ENABLE_L und ENABLE_H.

The relay output S1/S2 can be used to provide the status of the safety function. It is not safety-relevant, but can be used to test the external safety function.

The stop brake control is not a component of the safety function. If a safe shutdown of the stop brake is required, the +24 V-BR brake supply must also be shut down externally.

For the 24 V supply, only PELV/SELV can be used.

Implementation

The following block diagram gives an overview of the internal switching circuit.

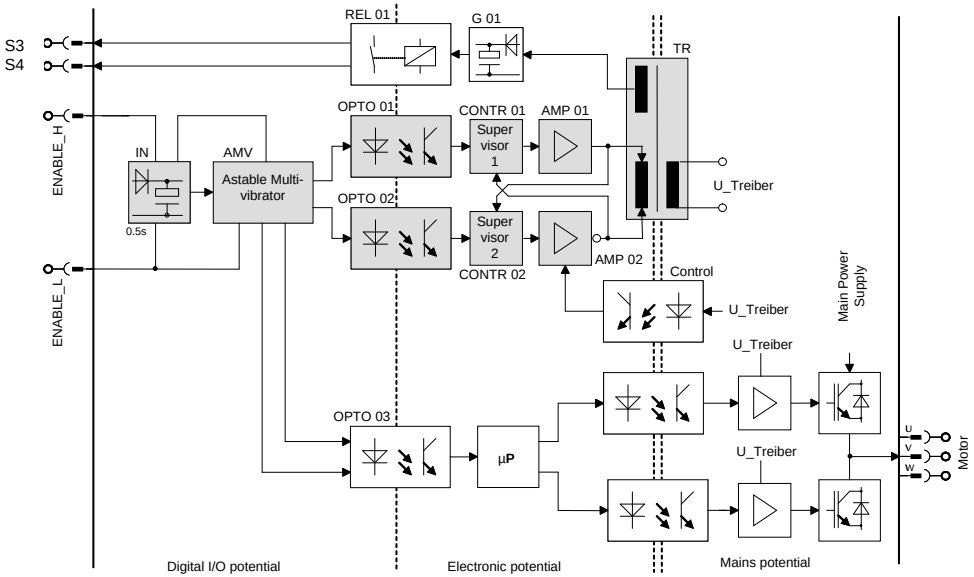

Block diagram for safe restart lock

The blocks in the diagram above have the following functions:

Block IN

The input block IN generates the supply voltage for the AMV block. This is formed from the voltage difference between ENABLE_H and ENABLE_L. Power is therefore available shortly after the appropriated signal is applied to ENABLE_H and ENABLE_L. The voltage difference between ENABLE_H and ENABLE_L must exceed the minimum HIGH signal.

The LOW signal ranges from 0 V to +5 V.
The High signal ranges from +15 V to +30 V.

If the input voltage is disconnected, the block maintains the supply voltage for the AMV block for approximately 400 ms. Because the differential voltage is supplied to the OPTO03 block without a delay, the motor can be actively slowed before the amplifier goes into the safe status by disabling U_Treiber.

Blocks AMV, OPTO 01 and OPTO 02

As long as the AMV block is powered by the IN input block, it generates a pulse with a constant frequency that is transmitted to the sequential electronics through blocks OPTO 01 and OPTO 02.

Blocks CONTR 01, CONTR 02, AMP 01, AMP 02 and TR

These blocks form a safe switching power supply, which generates the driver voltage for U_Treiber through the transformer TR01. It is ensured that the switching supply cannot transmit any energy when no control signal is sent from the AMV block over OPTO 01 and OPTO 02.

Blocks G01 and REL01

The relay output S1/S2 is closed when the servo amplifier is supplied with 24 V and the safety function is active. The two blocks are not safety-relevant.

Function

The safety functions in the DIAS Drive are controlled over two digital inputs.

The following table shows the status that the ENABLE_L and ENABLE_H inputs must assume to enable normal operation or trigger the safety function.

Input Status		**Relay output S3/S4**	**Description**
ENABLE_L	**ENABLE_H**		
Open	Open	When the servo amplifier is supplied with 24 V, the inputs are closed after a minimum delay 0.4 of seconds and a maximum of 1 seconds	**Safe status of the drive system**
Low	Low	When the servo amplifier is supplied with 24 V, the inputs are closed after a minimum delay 0.4 of seconds and a maximum of 1 seconds	• Single channel safe status only when using classic I/O technology • **Safe status of the drive system,** when a safe output is used by a Safe PLC, also when ENABLE_L is connected with „Ext. GND“
Low	Open		
Low	High	Open	**Drive system ready**

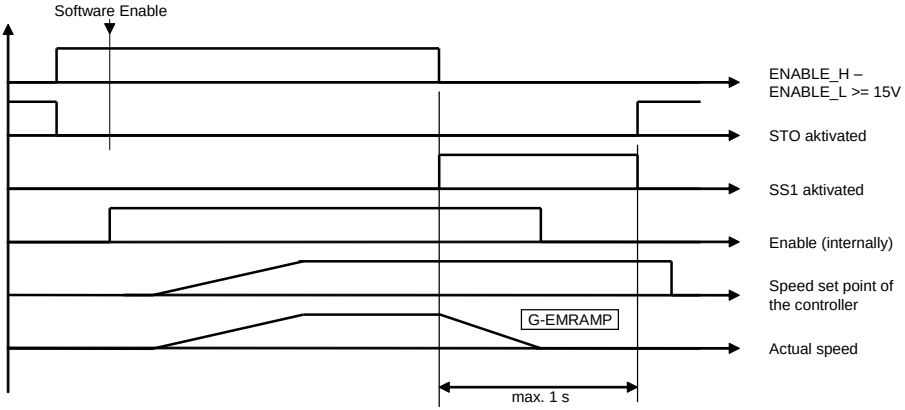

Timing Diagram

If the ENABLE_L and ENABLE_H are changed from any status to the "Drive Ready" status, the servo amplifier is not immediately enabled. In addition, in the software (**K-EN** = 1) or the corresponding bit in the "control word" must be set so that the software "enable" can be set and the drive therefore switched to the operational mode.

Function Test

The safety function test is required to ensure correct operation. The entire safety circuit must be tested for full functionality.
Tests must be performed at the following times:

- After installation
- In regular intervals, or at least once a year.

If the function test results in an invalid machine status, the error must be found and corrected before the safety function is retested. If the error reoccurs during the function test, the machine can no longer be operated.

Failure to follow the above safety measures can lead to severe injuries and damage.

Test conditions

The total safety circuit must be tested for functionability

The function test is performed from the following start condition:

- An operation-ready servo drive system
- Safe input ENABLE_L is LOW and ENABLE_H is HIGH
- Software application is running
- Motor(s) running

Depending on the wiring:

1. Both the ENABLE_L and ENABLE_H inputs are opened

or if ENABLE_L is connected to "Ext. GND" and the safe output of a Safety PLC is used for ENABLE_H.

2. ENABLE_H is open or LOW (depending on the wiring).

The motor speed is expected to slow to null and the relay output S1/S2 to close after a minimum delay of 0.4 s and a maximum of 1s when the servo drive is supplied with 24 V.

The servo drive system should go into safe mode.

Example Connection with Switching Contacts

To meet the requirements of safety category 4, performance level "e" for EN 13849-1 and SIL3 according to EN 62061, a two-channel control must be provided for the safety functions.

The wiring for both connections must be provided with protective insulation (to avoid the "external voltage supply" error).

For ENABLE_H this means, the other signals that can have a 24 V potential must be wired separately.

For ENABLE_L this means, the other signals that can have "Ext. GND" potential must be wired separately. Because the 24 V auxiliary voltage in the control cabinet is normally grounded, caution must be taken to avoid a short-circuit with PE. The can occur through, for example, wiring in a cable duct.

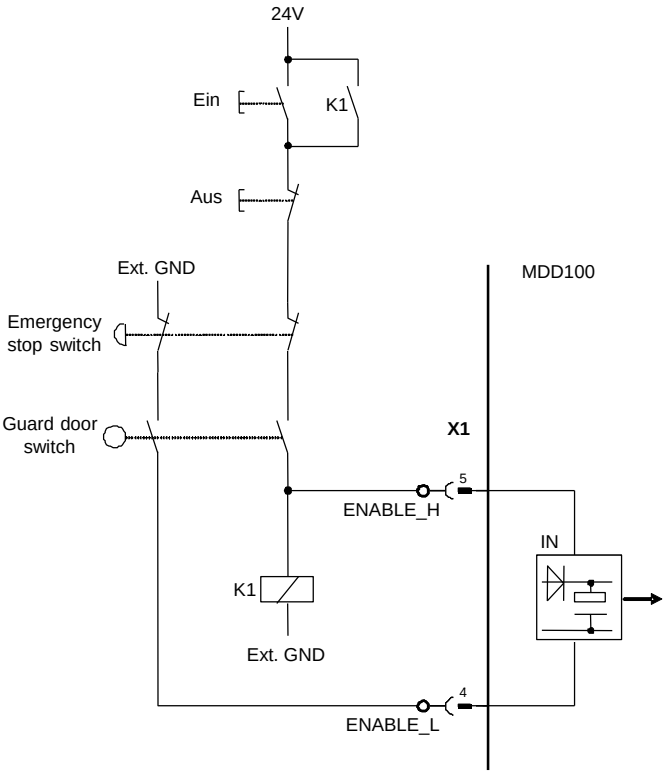

The schematic shows the possible wiring for use of conventional switch contacts.

Example: Safety PLC Application

To meet the requirements of safety category 4, performance level "e" for EN 13849-1 and SIL 3 according to EN 62061, an error-proof output of a safety PLC must be used.

There are two Types of error-safe outputs.

1. A simple error-safe output, which functions based on "Ext. GND" only. This is then connected to the ENABLE_H input.
   The wiring for both connections must be provided with protective insulation (to avoid the "external voltage supply" error).

   In this case, ENABLE_L is connected to "Ext. GND"

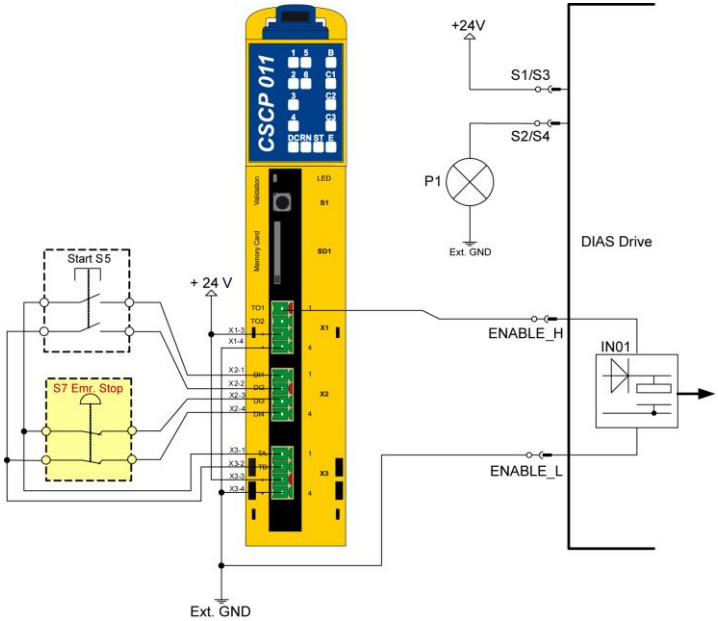

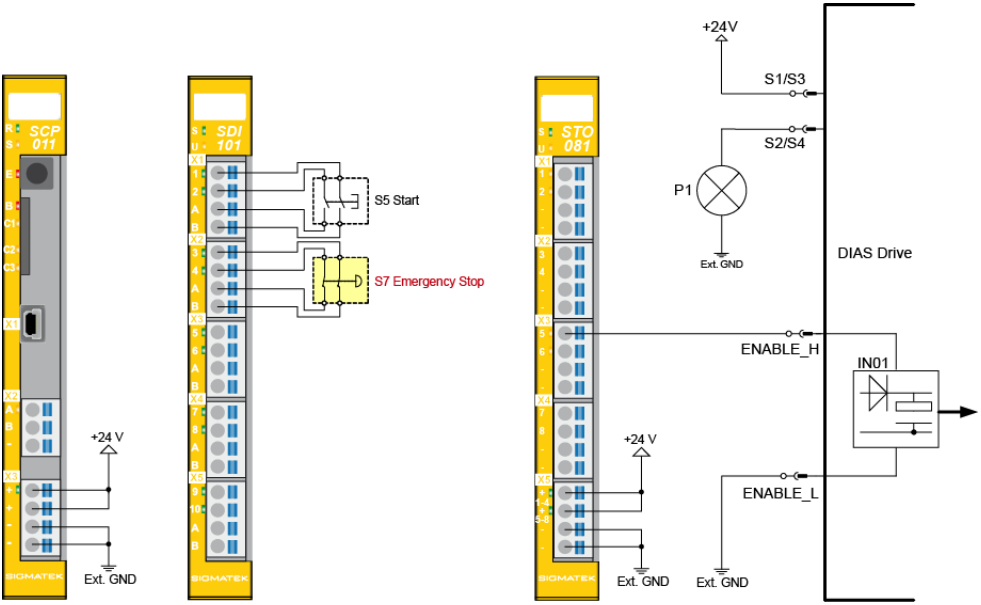
SCP 011
SDI 101
STO 081
S5 Start
S7 Emergency Stop
+24 V
Ext. GND
+24V
S1/S3
S2/S4
P1
Ext. GND
DIAS Drive
ENABLE_H
IN01
ENABLE_L
+24 V
Ext. GND
Ext. GND

2. Two-channel error-proof relay output, with which the + output is connected to ENABLE_H and the – output to ENABLE_L.

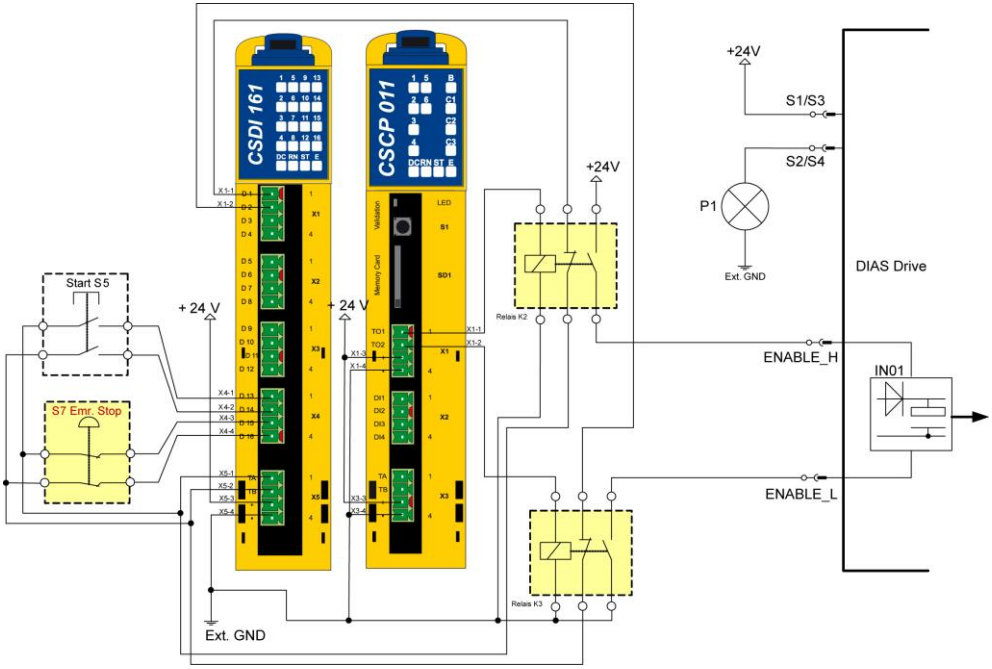

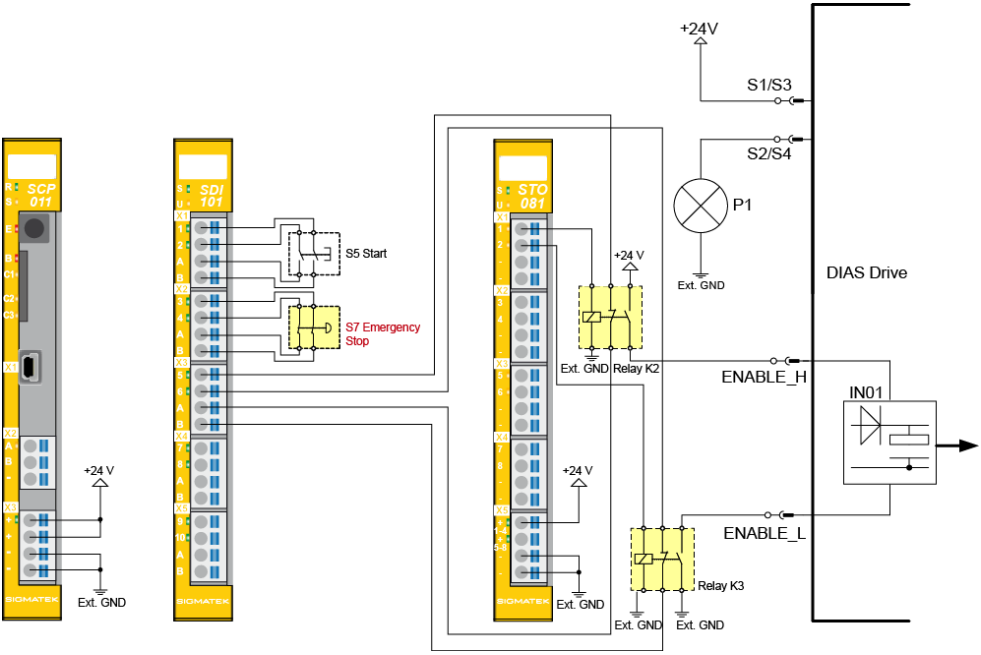
SCP 011
SDI 101
STO 081
S5 Start
S7 Emergency Stop
+24 V
Ext. GND
Relay K2
Relay K3
+24V
S1/S3
S2/S4
P1
DIAS Drive
ENABLE_H
ENABLE_L
IN01

7.7 Addressing

Address (hex)	Size (bytes)	Access	Description	Reset value
Axis 1				
0000	1	r/w	Transmit Execution Register Bit 0: 1 = Start Object Transfer Bit 1: 1 = Repeat Object Transfer Bit 2: 1 = Enable Value 3-5 Bit 3…7: Reserved	00
0001	1	r/w	Reserved	00
0002	1	r/w	Drive Control Byte	00
0003	1	r/w	Object Address	00
0004	4	r/w	Object Value	00000000
0008	4	r/w	Value 1	00000000
000C	4	r/w	Value 2	00000000
0010	4	r/w	Value 3	00000000
0014	4	r/w	Value 4	00000000
0018	4	r/w	Value 5	00000000
001C	4	r/w	Reserved	00000000
0020	1	r/w	Receive Status Register Bit 0: 1 = Executed Object Transfer Bit 1: 1 = CRC Error Bit 2…7: Reserved	00
0021	1	r/w	Reserved	00
0022	1	r/w	Digital In/Out Byte	00
0023	1	r/w	Transmit Control Byte	00
0024	4	r/w	Object Value	00000000
0028	4	r	Value 6	00000000
002C	4	r	Value 7	00000000
0030	4	r	Value 8	00000000
0034	4	r	Value 9	00000000
0038	4	r	Value 10	00000000
003C	4	r/w	Reserved	-

Axis 2				
0040	1	r/w	Transmit Execution Register Bit 0: 1 = Start Object Transfer Bit 1: 1 = Repeat Object Transfer Bit 2: 1 = Enable Value 3-5 Bit 3…7: Reserved	00
0041	1	r/w	Reserved	00
0042	1	r/w	Drive Control Byte	00
0043	1	r/w	Object Address	00
0044	4	r/w	Object Value	00000000
0048	4	r/w	Value 1	00000000
004C	4	r/w	Value 2	00000000
0050	4	r/w	Value 3	00000000
0054	4	r/w	Value 4	00000000
0058	4	r/w	Value 5	00000000
005C	4	r/w	Reserved	00000000
0060	1	r/w	Receive Status Register Bit 0: 1 = Executed Object Transfer Bit 1: 1 = CRC Error Bit 2…7: Reserved	00
0061	1	r/w	Reserved	00
0062	1	r/w	Digital In/Out Byte	00
0063	1	r/w	Transmit Control Byte	00
0064	4	r/w	Object Value	00000000
0068	4	r/w	Value 6	00000000
006C	4	r/w	Value 7	00000000
0070	4	r/w	Value 8	00000000
0074	4	r/w	Value 9	00000000
0078	4	r/w	Value 10	00000000
007C	4	r/w	Reserved	-
Axis 3				
0080	1	r/w	Transmit Execution Register Bit 0: 1 = Start Object Transfer Bit 1: 1 = Repeat Object Transfer Bit 2: 1 = Enable Value 3-5 Bit 3…7: Reserved	00
0081	1	r/w	Reserved	00
0082	1	r/w	Drive Control Byte	00

0083	1	r/w	Object Address	00
0084	4	r/w	Object Value	00000000
0088	4	r/w	Value 1	00000000
008C	4	r/w	Value 2	00000000
0090	4	r/w	Value 3	00000000
0094	4	r/w	Value 4	00000000
0098	4	r/w	Value 5	00000000
009C	4	r/w	Reserved	00000000
00A0	1	r/w	Receive Status Register Bit 0: 1 = Executed Object Transfer Bit 1: 1 = CRC Error Bit 2…7: Reserved	00
00A1	1	r/w	Reserved	00
00A2	1	r/w	Digital In/Out Byte	00
00A3	1	r/w	Transmit Control Byte	00
00A4	4	r/w	Object Value	00000000
00A8	4	r/w	Value 6	00000000
00AC	4	r/w	Value 7	00000000
00B0	4	r/w	Value 8	00000000
00B4	4	r/w	Value 9	00000000
00B8	4	r/w	Value 10	00000000
00BC	4	r/w	Reserved	-
Axis 3 – Telegram Type 2 (Fast Axis)				
00C0	1	w*	Transmit Execution Register Bit 4 : 1 = Enable Telegram Typ 2 Bit 5 : 1 = Direct Access	00
00C1	1	w*	reserved	00
00C2	1	w*	Drive Control Byte	00
00C3	1	w*	reserved	00
00C4	4	w*	Value 3	00000000
00C8	4	w*	Value 4	00000000
00CC	4	w*	Value 5	00000000
00D0	16	-	reserved	-
00E0	1	r/w	reserved	00

00E1	1	r/w	reserved	00
00E2	1	r/w	Digital In/Out Byte	00
00E3	1	r/w	Transmit Control Byte	00
00E4	4	r/w	Value 8	00000000
00E8	4	r/w	Value 9	00000000
00EC	4	r/w	Value 10	00000000
00F0	16	r/w	reserved	-

For additional addressing, see the VARAN bus specifications

More addressing applications can be found in the DIAS drive parameter documentation.

7.8 Recommended Shielding for VARAN

The real-time VARAN Ethernet bus system exhibits very robust characteristics in industrial environments. Through the use of IEEE 802.3 standard Ethernet physics, the potentials between an Ethernet line and sending/receiving components are separated. Messages to a bus participant are immediately repeated by the VARAN Manager in the event of an error. The shielding described below is principally recommended.

For applications in which the bus is run outside the control cabinet, the correct shielding is required. Especially when for structural reasons, the bus line must be placed next to strong electromagnetic interference.

SIGMATEK recommends the use of CAT5e industrial Ethernet bus cables.

For the shielding, an S-FTP cable should be used.
An S-FTP bus is a symmetric, multi-wire cable with unshielded pairs. For the total shielding, a combination of foil and braiding is used. A non-laminated variant is recommended.

The VARAN cable must be secured at a distance of 20 cm from the connector for protection against vibration!

7.8.1 Wiring from the Control Cabinet to an External VARAN Component

If the Ethernet lines are connected from a VARAN component to a VARAN node located outside the control cabinet, the shielding should be placed at the entry point to the control cabinet housing. All noise can then be dissipated before reaching the electronic components.

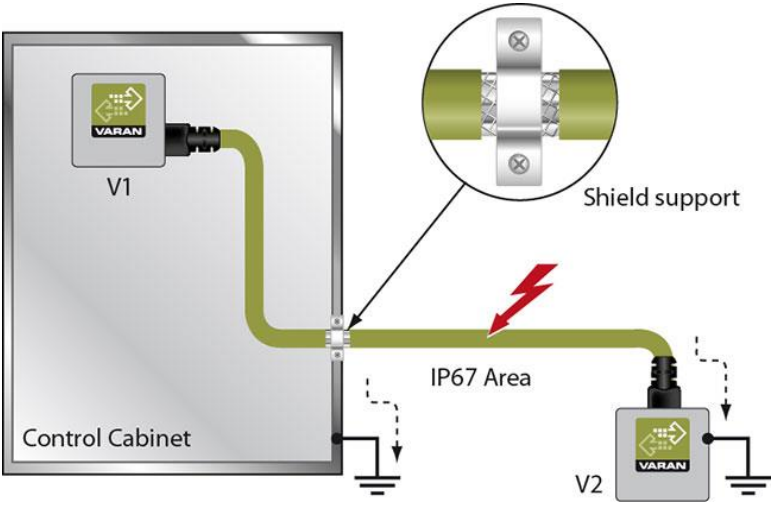

7.8.2 Wiring Outside of the Control Cabinet

If a VARAN bus cable must be placed outside of the control cabinet only, no additional shield connection is required. This requires that only IP67 modules and connectors be used. These components are very robust and noise resistant. The shielding for all sockets in IP67 modules are internally connected to common bus or electrically connected to the housing, whereby the deflection of voltage spikes does not flow through the electronics.

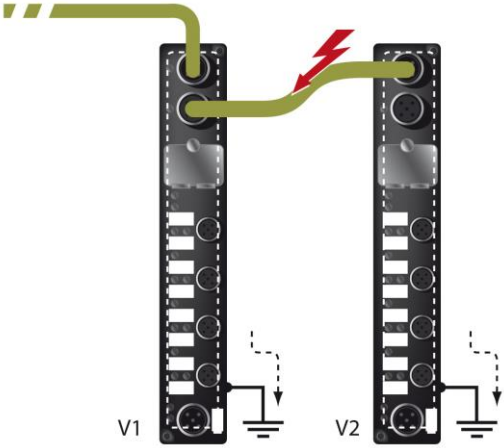

7.8.3 Shielding for Wiring Within the Control Cabinet

Sources of strong electromagnetic noise located within the control cabinet (drives, Transformers, etc.) can induce interference in a VARAN bus line. Voltage spikes are dissipated over the metallic housing of a RJ45 connector. Noise is conducted over the control cabinet without additional measures needed on the circuit board of electronic components. To avoid error sources with data exchange, it is recommended that shielding be placed before any electronic components in the control cabinet.

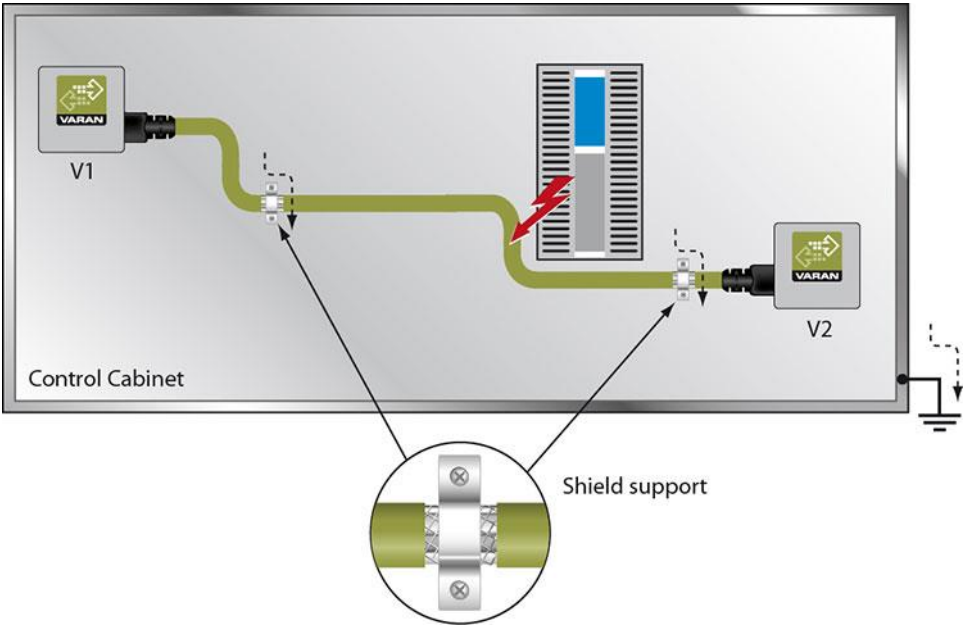

7.8.4 Connecting Noise-Generating Components

When connecting power lines to the bus that generate strong electromagnetic noise, the correct shielding is also important. The shielding should be placed before a power element (or group of power elements).

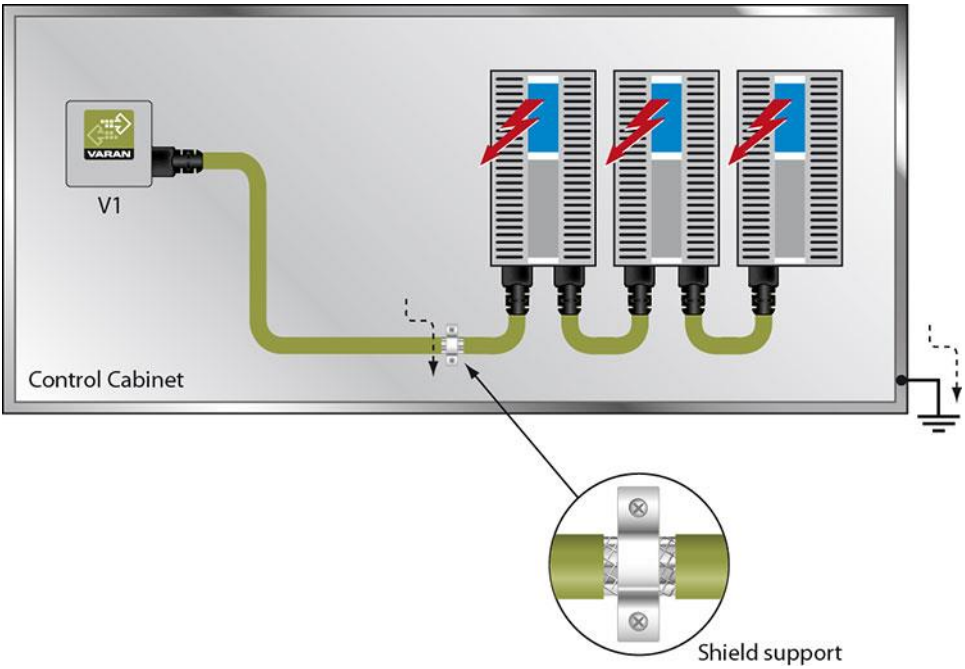

7.8.5 Shielding Between Two Control Cabinets

If two control cabinets must be connected over a VARAN bus, it is recommended that the shielding be located at the entry points of each cabinet. Noise is therefore prevented from reaching the electronic components in both cabinets.