DIAS-Drive 310-3

Date of creation: 23.02.2010 | Current version: 25.01.2021 | Article No.: 10-501-101-3E

Publisher: SIGMATEK GmbH & Co KG
A-5112 Lamprechtshausen
Tel.: +43/6274/4321
Fax: +43/6274/4321-18
e-mail: office@sigmatek.at
WWW.SIGMATEK-AUTOMATION.COM

Translation from German

DIAS-Drive 310-3

This handbook describes the servo amplifier of the DIAS-Drive series.

The individual chapters:

- Technical Data
- Assembly and Installation
- Description of interfaces
- Servo Amplifier settings
- Accessories
- Transport, Storage, Maintenance, Disposal

Abbreviations used in this manual

Abbreviation	Definition
AWG	American Wire Gauge (American cable coding)
BGND	Mass for the 24V auxiliary and braking supply
CE	Communité Europeenne
CLOCK	Clock signal
EMC	Electromagnetic Compatibility
EN	European Norm
IGBT	Insulated Gate Bipolar Transistor
LED	Light Emitting Diode
PELV	protected Extra Low Voltage
RES	Resolver
$R_{int.}$	Internal regen resistor connection
R_{tr}	Brake chopper connection
V AC	Alternating Current
V DC	Direct current

Contents

1 General

1.1 Symbols used in this manual

	**Danger!**	**Electric shock**	Danger to personal from electricity and its effects
	**Caution!**	**General**	Danger to machines General warning
	**Caution!**	**Hot surface**	Hot surface more than 80 °C (176 °F)
	**Important note**		See Manual

1.2 Safety Guidelines

The safety instructions must be read before installation and initial start-up of the servo amplifier. Improper handling of the servo amplifier can lead to personal injury or material damage. Compliance with the technical data and connection specifications (nameplate and documentation) mandatory.

Only qualified personnel may perform tasks such as transportation, assembly, Initial startup and maintenance. Qualified personnel are those who are familiar with the transport, assembly, installation, setup and operation of the product, and have the appropriate qualifications for their task.

The machine manufacturer must perform a safety analysis for the entire machine. With the appropriate measures, the manufacturer ensures that no injuries or damage can be caused by unexpected movements.

Improper operation of the servo amplifier or failure to follow the following guidelines and improper handling of the safety equipment can result in damage to the machine, personnel injury, electrical shock or in extreme cases, death.

Annotations

Danger! Shock current

After disconnecting the servo amplifier from the voltage supply, a wait-time of at least 5 minutes is required before current conducting components of the amplifier (e.g. clamps) can be touched or connectors removed. After turning off the voltage supply, the internal capacitors can have dangerous voltage levels for up to 5 minutes. For safety purposes, measure the voltage in the intermediate circuit and wait until the voltage is below 40 V.

The electrical connectors of the servo amplifier can never be removed while voltage is applied. The danger of electrical arcing exists, which could cause personal injury as well as damage to the contacts.

When using a ground fault interrupter in the circuit, a Type B FI-switch must be used. If an FI switch of Type A is used, a DC ground fault could cause it to malfunction.

Failure to follow these instructions can lead to death, serious injury or damage to the machine.

Warning General

The use of the servo amplifier is defined by EN61800-3. In living areas, this product can cause EMC interference problems. In such a case, the user must take additional filtering measures.

The servo amplifier contains electrostatic-sensitive components, which can be damaged by improper handling. Before touching the servo amplifier, the user must discharge their body by touching a grounded object with a conductive surface. Contact with highly insulated material (synthetic fiber, plastic foil etc.) must be avoided. The servo amplifier must be placed on a conductive surface.

Opening the device is not allowed. During operation, keep all covers and control cabinet doors closed. The danger of severe damage to health or material, as well as death exists.

During operation, servo amplifiers – according to their protection type – may have bare, voltage-carrying components. Control and power connections may be live, even if the motor is not turning.

The main voltage supply for the DIAS-Drive requires a fixed connection. If the servo amplifier is mounted on a moveable part of a machine with a connector plug, the ground connection must have a minimum cross-section of 10 mm² (8 AWG) because of the high leakage current of the servo amplifier (> 3.5 mA).

The +24 V auxiliary power supply and the power supply for the +24V-BR holding brake supply must be galvanically separated as protective extra-low voltage (PELV) according to EN 60950.

Failure to follow the above safety measures can lead to severe injuries and machine damage.

Caution! Hot surface

During operation, the heat sink of the servo amplifier can reach temperatures of over 80° C (176° F). The heat sink temperature should be checked before handling and it may be necessary to wait until it has fallen below 40 °C (104 °F).

Failure to follow the above safety measures can lead to severe injuries.

Caution! Electromagnetic Fields (EMF)

Risk of death!

Due to the electromagnetic fields generated during operation of the servo amplifier, people with pacemakers or implants are particularly at risk if they are in the immediate vicinity of the device.

Caution must therefore be taken to ensure that such persons maintain the necessary safety distance of at least 2 m.

1.3 Servo Amplifier Components

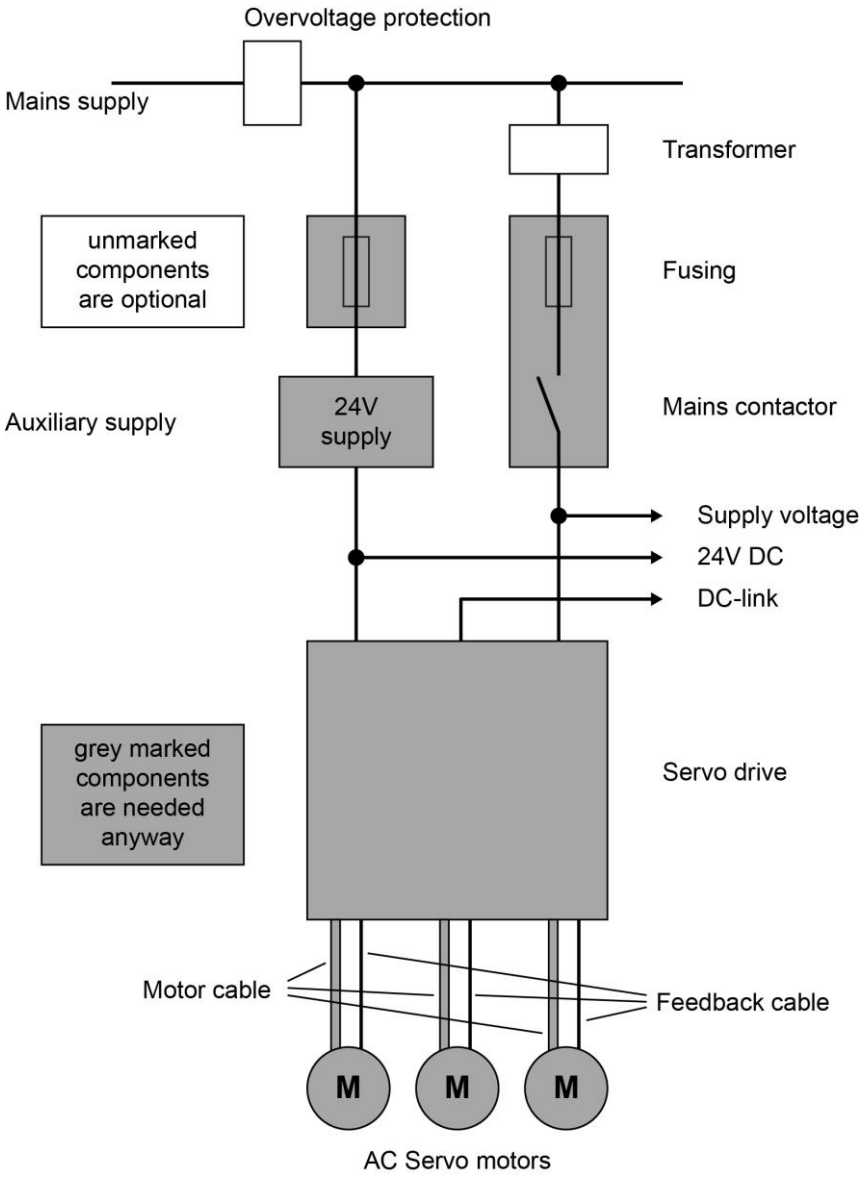

1.4 European Guidelines and Standards

Servo amplifiers are components designed for installation in electrical systems/machines for industrial use. During the installation into machines/systems, the servo amplifier should not be operated until it has been determined that the machine/system meets the requirements of the machine guideline 2006/42/EC and the EMC guideline 2014/30/EU.

Note: **The machine manufacturer must perform a safety analysis for the entire machine. With the appropriate measures, the manufacturer ensures that no injuries or damage can be caused by unexpected movements.**

CE – Conformity

With the delivery of servo amplifiers within the European Union, compliance with the EMC 2014/30/EU and low voltage 2014/35/EU guidelines is mandatory.

The harmonized standard EN 61800-5-1 (Electrical Power Amplifier Systems with Adjustable Speed - part 5-1: Requirements for the Safety of Electrical, Thermal and Energetic Demands) was included with the 2014/35/EU low voltage guideline for this servo amplifier.

The harmonized standard EN 61800-3 (Electrical Power Amplifier systems with Adjustable Speed - Part 3: EMC product standard including special test methods) was included with the 2014/30/EU for this servo amplifier.

To meet the EMC conditions for the installation, the documentation contains detailed information on:

- shielding
- grounding
- control cabinet wiring
- filters (in necessary)

The servo amplifier from the DIAS-Drive series was tested with the system components and the corresponding configuration defined in this document. Any change in the configuration and installation described in this document requires new measurements to ensure the standards are met.

1.5 Designated Use

The servo amplifier from SIGMATEK GmbH & Co KG was designed and produced with state of the art technology. The product was tested for reliability before delivery, especially in terms of fail-safe conditions. It is an installed component for electrical systems and can only be operated as an integral part. Before installation, the following conditions for designated use must be met:

- Each user of the product must read and understand the safety instructions for designated and non-designated use.
- The machine manufacture must perform a safety analysis of the machine in order to ensure that no injuries or damage is caused to personnel and equipment by unexpected movements.
- The servo amplifier must be operated under the assembly and installation conditions described in this document. The environmental conditions (temperature, protection class, humidity, voltage supply, EMC and mounting position) must be observed in particular.
- The amplifier can only be operated in a control cabinet with **minimum IP54**.
- The Servo amplifier must be operated in the original condition without any mechanical or electrical changes.
- Mechanically or electrically defective or faulty servo amplifiers may be not installed or operated.
- The servo amplifier is provided for the control of synchronous servo, linear and torque motors, as well as frequency, torque, speed or position control of asynchronous motors.
- The specified rated voltage of the motor must be at least as high as the power supply voltage of the servo amplifier (230 V, 400 V or 480 V).
- Only motors with star circuit may be used.
- This product can lead to EMC disruptions in living areas. In such a case, the user must take additional filtering measures.

1.6 Non-designated Use

If a servo amplifier is operated according to the environmental conditions described in this document, it is "designated use".

- Single-phase operation is not authorized as standard use, but is allowed for initial startup and demonstration purposes.
- Because of saline and therewith, conductive contamination, the servo amplifier cannot be used on ships (sea operation) or in offshore applications.
- The servo amplifier cannot be operated under any environmental conditions other than those described in this documentation (meaning without a control cabinet, incorrect assembly etc.)

Particular caution is required in production facilities, in which conductive material such as carbon fiber, graphite, and cast iron or similar material is used. In such cases, the control cabinet must be hermetically sealed (no forced ventilation with fan filters) or placed outside of the contaminated area. Especially during the initial start-up, the danger posed by open control cabinet doors is extremely high. Contaminated servo amplifiers may no longer be used.

1.7 Block Diagram

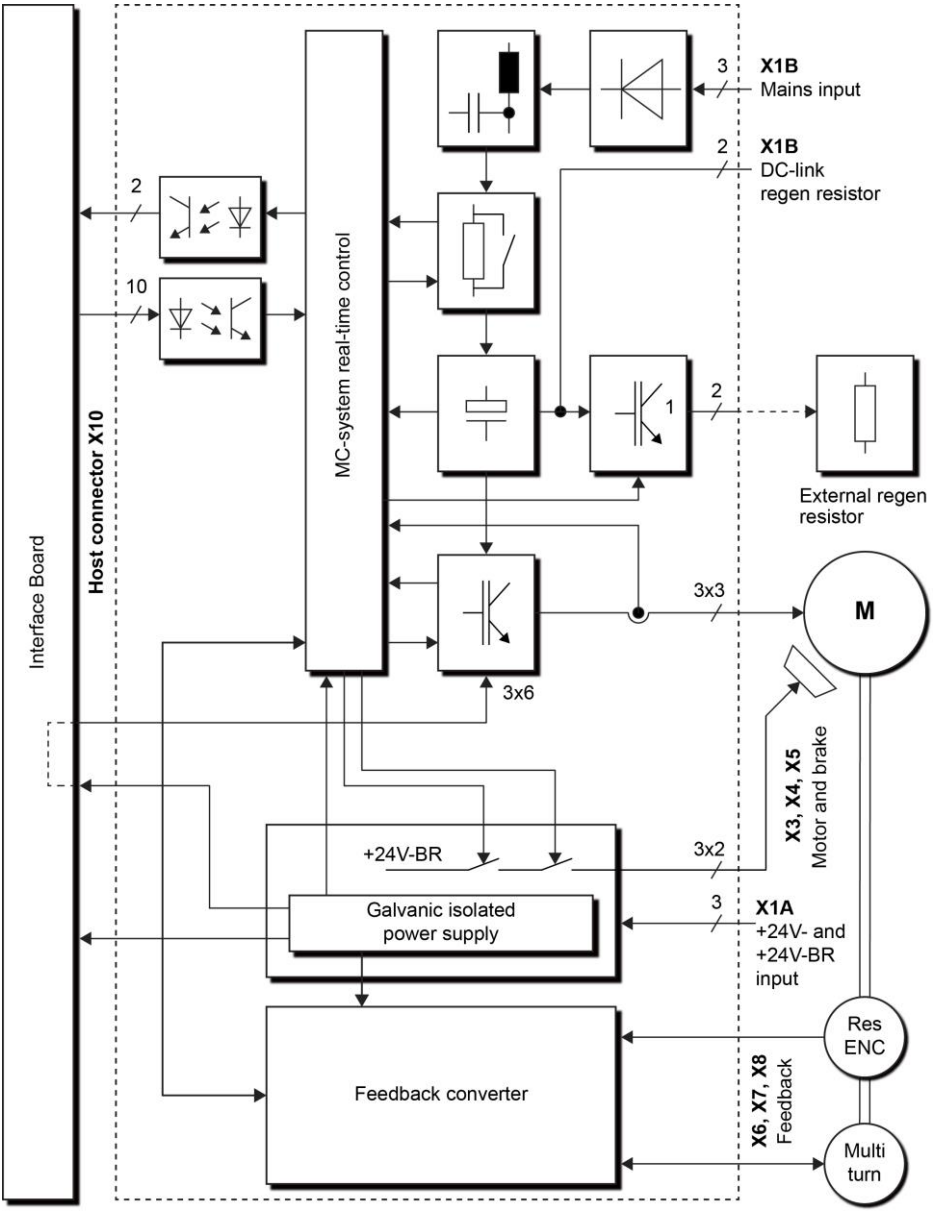

1.7.1 Hardware

- The main supply is connected to a rectifier, input filter and a charging circuit, which reduces the load current for the power-up moment.
- IGBT – Power output stage with separate current measurement (short-circuit protected).
- Short-circuit proof brake chopper for circuit with external regen resistor.
- DC link for connection to additional amplifiers.
- Auxiliary voltage for the internal supply.
- Separate voltage supply for the holding brake.
- Evaluation from the resolver, EnDAT and Hiperface sensors.
- Micro controller system with communication for the interface

1.7.2 DIAS-Drive Concept

- 1 and 3-axis amplifiers to reduce machine costs. 3-axis amplifiers have advantages reducing components
- Auto-range function to optimize the resolution of the actual current value of 10 A axes, in various configurations.
- Two different mounting options.
  - On a mounting place in the control cabinet
  - Through-hole technology
- Broad input voltage range from 3 x 230 $VAC_{-10\%}$ … 3 x 480 $VAC^{+10\%}$ supplied from TN-supply or TT-supply with grounded neutral point, with a maximum current of symmetrical 5000 A_{RMS} .
- TT supplies without grounded neutral lines require additional measures.
- Charging circuit for limiting the maximum load current at the power-up moment.
- Fuse installed by user (phase failure is monitored by the amplifier)
- 1-phase operation is possible, e.g. for initial start-up
- 24 V auxiliary supply, galvanically isolated for independent power.
- Separate 24 Volt connection to power the holding brakes.
- Noise filter for the main, 24V auxiliary and holding brake supplies, class A (industrial use)
- Housing with connection for the cable shielding
- Protective functions against:
  - Under or over voltage in the DC-link circuit.
  - Several short circuit conditions
  - Phase error in the main supply
  - Brake resistance over heating
  - Over temperature (heat sink, ambient and motor)
- The overload protection is provided internally by the drive. The load current is limited to 100 % of peak output current. For the thermal protection of the motor the I^2T regulation is used.

Integral solid state short circuit protection does not provide branch circuit protection. Branch circuit protection must be provided in accordance with the Manufacturer Instructions, National Electrical Code and any additional local codes.

1.7.3 Software Functions

- Modified space vector modulation (SVM) technique to reduce the power stage losses
- Field oriented current controller (update time 62.5 µs)
- Feedback evaluation and speed controller (update time 62.5 µs)
- Spline interpolation and position controller (update time 62.5 µs)
- Full synchronisation up to the output stage to the control frequency with cycle times of 250 µs, 500 µs and 1 ms to 8 ms
- The servo amplifier has a volatile data storage medium. After power-up, the parameters are loaded into the servo amplifier via the host

1.8 Technical Data

	DIM	DIAS-Drive SDD310-3
Rated values		
Rated input voltage (symmetrical opposite to earth) max. 5000 A rms (L1, L2, L3)	V_{AC}	3 x 230 $V_{-10\,\%}$ – 480 $V^{10\%}$, 45 – 65 Hz
Max. peak current at power-up moment (limited by the charging circuit)	A	2.5
Rated power in S1 mode	kVA	14
Rated DC-link voltage	V_{DC}	290 – 680
Over voltage protection – limit for the intermediate circuit	V_{DC}	450 – 900
Additional voltage supply +24 V	V_{DC}	22 – 30
Power from the addtional +24 V	W	35
Holding brake supply +24 V-BR	V_{DC}	25 – 27
Max. holding brake current per axis	A_{DC}	2
Holding brake voltage drop with a load +24 V-BR	V_{DC}	Max. 1 (at 3 x 2 A holding brake current)
Max. switching energy of the holding brake	mJ	100
Rated current for axis 1 (rms +/- 3 %)	A_{rms}	10
Max. standstill current for axis 1 starting from 500 ms	A_{rms}	7
Rated current for axis 2 (rms +/- 3 %)	A_{rms}	10
Max. standstill current for axis 2 starting from 500 ms	A_{rms}	7
Rated current for axis 3 (rms +/- 3 %)	A_{rms}	10
Max. standstill current for axis 3 starting from 500 ms	A_{rms}	7
Max. continuous sum current of all axes (heat sink)	A_{rms}	20
Peak output current axis 1 for a max 5 s (rms +/- 3 %)	A_{rms}	20
Peak output current axis 2 for a max 5 s (rms +/- 3 %)	A_{rms}	20
Peak output current axis 3 for a max 5 s (rms +/- 3 %)	A_{rms}	20
The loss in the power output stage (add the average current of the 3 axis and multiply by the factor) without brake unit losses	W / A_{rms}	10
Output frequency of the power output stage	kHz	8
Maximum output current for 8 V -feedback systems at X6, X7, X8	mA	250
Minimum output current for 8 V -feedback systems at X6, X7, X8	mA	0
Maximum output current for 5 V -feedback systems at X6, X7, X8	mA	250
Minimum output current for 5 V -feedback systems at X6, X7, X8	mA	50
Maximum residual current	mA	15
PWM frequency	kHz	8
Regulator frequency	kHz	16

Brake unit		
Capacitance of the intermediate circuit voltage	µF	700
External regen resistor	Ω	25 – 50
G-VMAINS = 230 (rated supply voltage = 230V)		
Start-up limit	V_{DC}	420
Switch-off level	V_{DC}	400
Over voltage protection	V_{DC}	450
Max. rated power of the external regen resistor	W	750
G-VMAINS = 400 (rated supply voltage = 400 V)		
Start-up limit	V_{DC}	730
Switch-off level	V_{DC}	690
Over voltage protection	V_{DC}	800
Max. rated power of the external regen resistor	W	1200
G-VMAINS = 480 (rated supply voltage = 480 V)		
Start-up limit	V_{DC}	850
Switch-off level	V_{DC}	810
Over voltage protection	V_{DC}	900
Max. rated power of the external regen resistor	W	1500
Resolver Specifications		
Exciter frequency f_{err}	kHz	8
Exciter voltage U_{Ref}	U_{eff}	4
Number of poles m	-	2, 4, 6 … 32
Resolver voltage $U_{sin/cos, max}$	U_{eff}	2.2
Internal fuse		
24V auxiliary supply voltage (+24V to BGND)	-	Electronic fuse
Holding brake supply 24 V BR (+24 V BR to BGND)	-	Electronic fuse
Regen resistor	-	Electronic protection
Connector types		
Internal auxiliary power supply (X1A)	-	Combicon 5, 3-pin, 2.5mm²
Power supply (X1B)	-	Power Combicon 7.62, 8-pin, 4mm²
Feedback (X6, X7, X8)	-	Sub-D 25-pin (female)
Motor (X3: X4 = X5)	-	Power Combicon 7.62, 6-pin, 4mm²
Dimensions		
Height	mm	428
Width	mm	152
Depth	mm	121.3
Weight	kg	6.35
General		
Article number	09-501-101-3	
Standard	UL 508C, E336350	

1.9 Environmental Conditions, Ventilation and Mounting

Storage conditions	⇨ Page 47
Transport conditions	⇨ Page 47
Environmental temperatures in operation	0 … +45°C (32 … 113°F) at rated values +45 … 55°C (113 … 131°F) with power reduction by 2.5% / K
Humidity	0-95 %, non-condensing
Installation altitude above sea level	0-2000 m without derating > 2000 m with derating of the maximum environmental temperature by 0.5 °C per 100 m
Pollution degree	2
Servo amplifier protection class	IP20
Mounting position	⇨ Page 24
Ventilation	Forced ventilation with internal fan controller

Note: When installing the DIAS Drives, it is important to ensure that the mounting surface has a planarity tolerance of 0.2 mm. In addition, a heat-conducting paste must be placed between the mounting surface and cooling plate.

1.10 Auxiliary Supply Voltage

The power supply mounted in the switchgear cabinet and used for the +24 V auxiliary supply voltage and holding brake supply (+24V-BR), must output a galvanically isolated protected extra-low voltage (PELV) according to EN60950. Due to the start current at the power-up moment, the rated current must be at least 5 A.

2 Installation

2.1 Important Instructions

- When using a ground fault interrupter in the circuit, a Type B FI-switch must be used. If an FI switch of Type A is used, a DC ground fault could cause it to malfunction. High-frequency leakage currents occur, which must be taken into consideration when selecting the FI (e.g. Schrack ID-B 4/XX/XX-B).

  Trigger diagram:

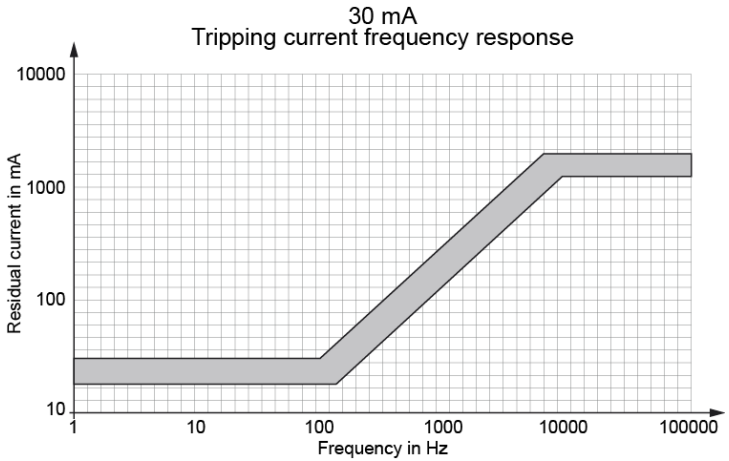

- The servo amplifier and motor must be grounded according to the guidelines. Uncoated mounting plates must be used in the control cabinet.
- The DIAS-Drive must be connected to ground via the grounding terminal using a wire with a cross section of at least 10 mm² (8 AWG).
- The main voltage supply for the DIAS-Drive requires a fixed connection. If the servo amplifier is mounted with a connector terminal to a moving machine part, the ground connection must have a cross section of at least 10 mm² (8 AWG) to avoid the high residual current (> 3.5 mA).
- Before installation, the servo amplifier must be mechanically tested. If damage from transportation is determined, for example, the amplifier cannot be used. Electronic components cannot be handled.

- The rated voltage and current of the servo motor and servo amplifier must match. The electrical connection must correspond to the schematic on page 22.

- The main supply can under no circumstances exceed the rated values for the servo amplifier. **“Voltage Supply Options”** on page 29 should be noted.

- The external fuse for the main supply, the +24 V auxiliary and holding brake supply must meet the specifications for **“External fusing”** on page 28.

- The motor and control cable should be routed with a minimum clearance of 100 mm. This improves the effect of noise in the control cable, which is caused by the high noise generation of the motor cable. A shielded motor and feedback cable must be used, by which the shielding on both cable ends is applied.

- As described on page 24, the correct mounting position is vertical.

- The ventilation in the control cabinet must provide sufficient cool and filtered air. Information on the **“Environmental conditions, ventilation and mounting”** can be found on page 19.

- **Any subsequent changes to a servo amplifier will render the warranty void**, with exception of the parameter settings.

- During the initial start-up of the servo amplifier, the peak current must be tested. small motors can be damaged quickly, especially if the servo amplifier settings are to high (e.g. a 1 A motor with a 10 A amplifier without being limited to 1 A).

- Note: The mass symbol found in all schematic plans means that the electric connection between the indicated device and the mounting panel in your control cabinet must be made over the largest possible surface. This connection should enable the dissipation of HF noise and should not be confused with the PE symbol . (Protective measure according to EN 60204)

- Storage time:
  < 1 year: no limitations
  ≥ 1 year: The intermediate circuit capacitors of the servo amplifier must be reformed before the initial startup. In addition, all electrical connections must be removed and the servo amplifier supplied with 230 V AC, single phase at terminals L1 / L2 for 30 minutes.

2.2 Construction of the Control Cabinet

2.2.1 Wiring Diagram and Pin Assignment

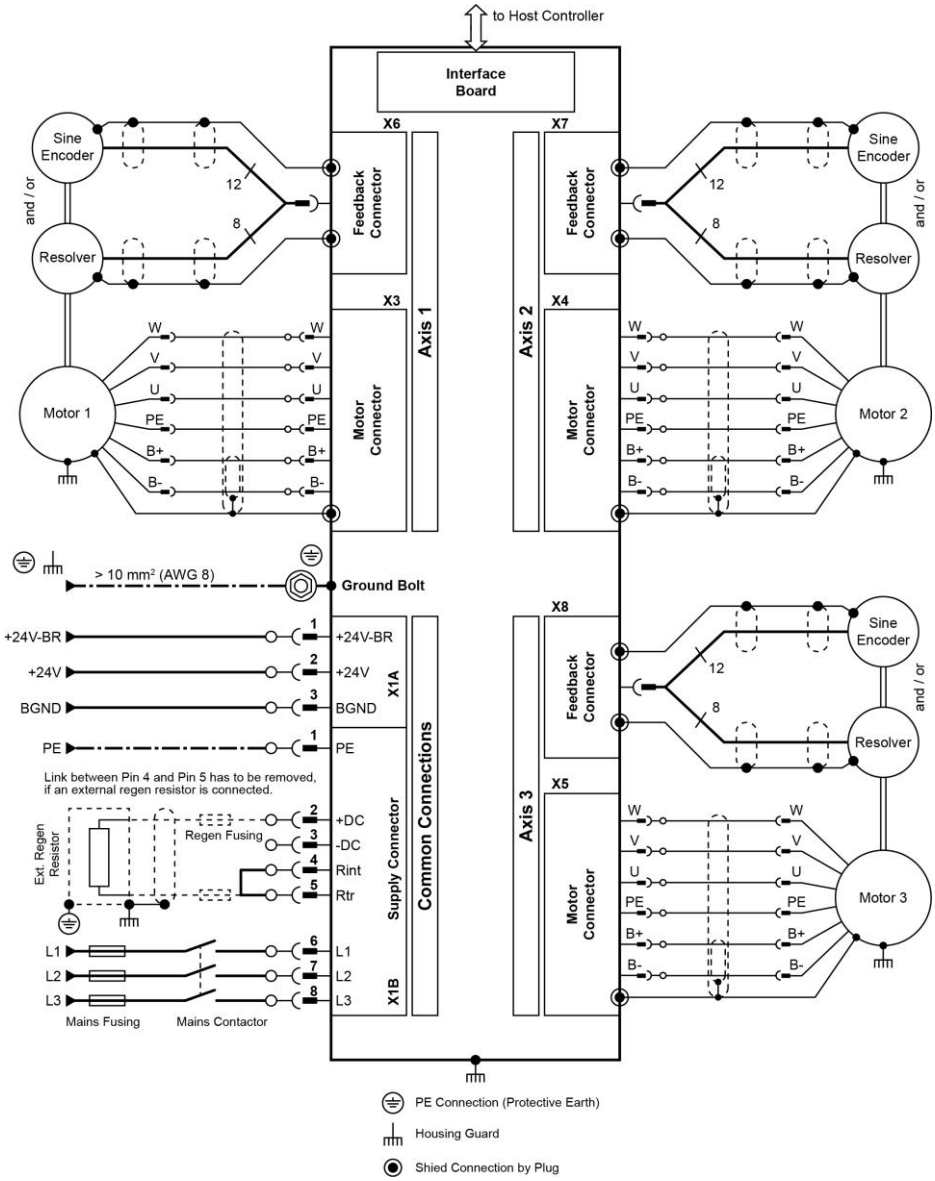

2.2.1.1 SDD 310-3

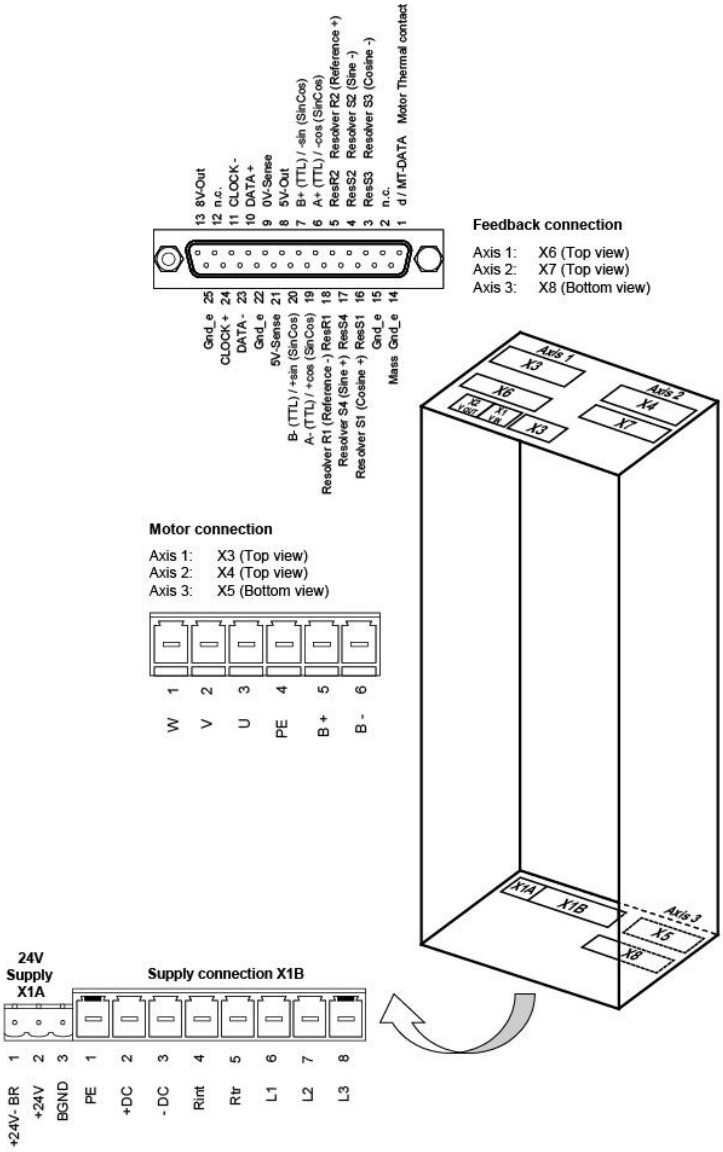

Amplifier type	Axis 1		Axis 2		Axis 3	
Cable	Motor	Feedback	Motor	Feedback	Motor	Feedback
SDD310-3	X3	X6	X4	X7	X5	X8

2.2.2 Mechanical Construction and Mounting

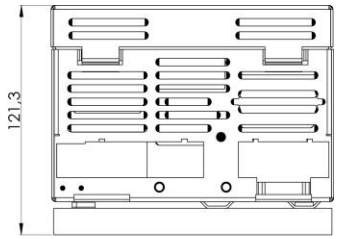

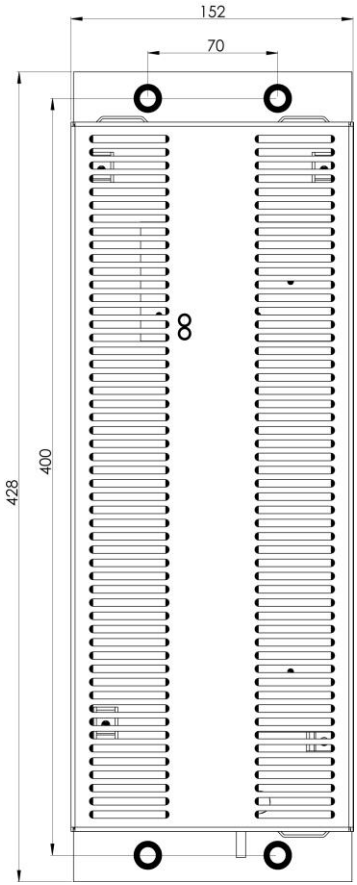

The drawing shows the servo amplifier dimensions

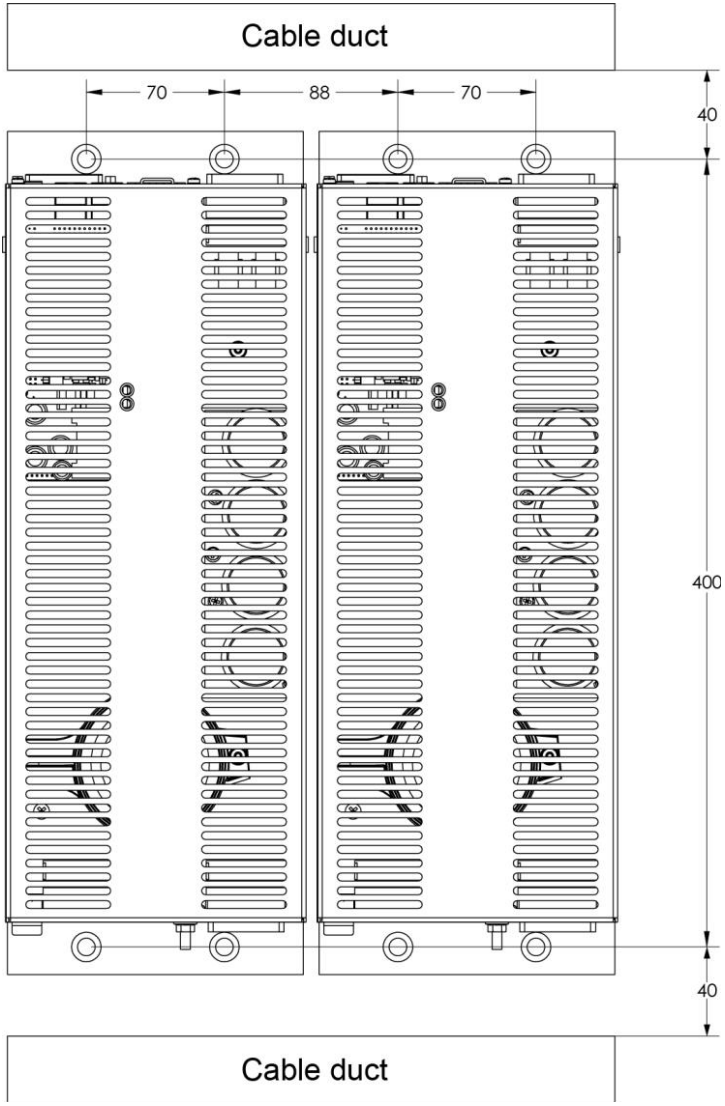

The cable channels below and above the servo amplifier must have the specified distances. This will ensure the sufficient air reaches the heat sink.

Material: 4 x M5 socket head screws DIN 912
Required tool: 4 mm Allen key

2.2.3 Laying the Motor and Control Cables

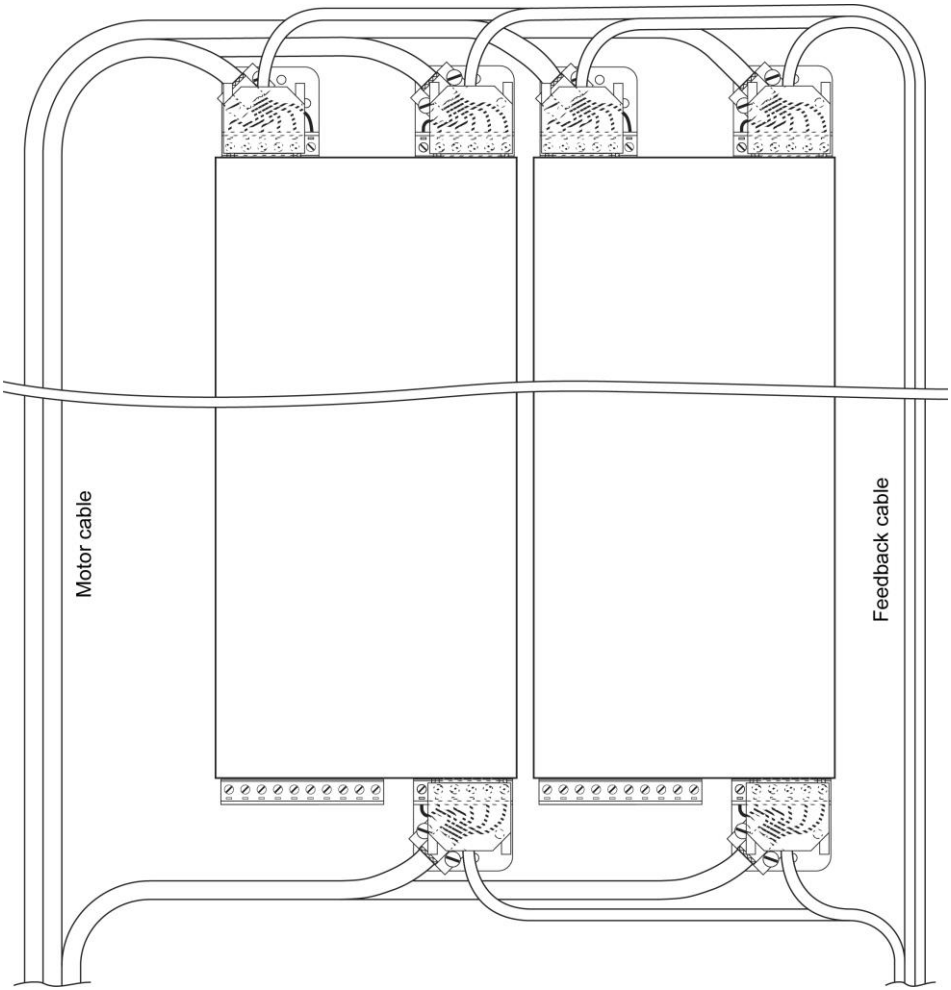

Note: The motor and control cable must absolutely be kept separate. The voltage connection to X1B should also be laid mainly in the cable channels on the left side of the control cabinet.

2.2.4 Connector Models

All connections to the servo amplifier are connector plugs (except: grounding bolt). With this method, the cable connection is simplified and the amplifier can be more easily exchanged. Additionally, it also provides the possibility to manufacture pre-assembled cable sets for large machine quantities.

The following is the technical data for the applicable connectors:

Connectors	Type	Allowable cross section	Max. tightening torque
X1A	Phoenix MSTB 2.5 HC/3-ST	1-2.5 mm² (14-18 AWG)	0.3 Nm (2.25 inch lb)
X1B	Phoenix PC4/8	1-4 mm² (12-18 AWG)	1.3 Nm (12 inch lb)
X3 X4 X5 B3	Phoenix PC4/6	1-2.5 mm² (14-18 AWG)	1.3 Nm (12 inch lb)
X6 X7 X8 B3	D-Sub 25 with metal housing	0.25-0.5 mm² (21-24 AWG)	solder or crimp
Ground bolt	M5	10 mm² (8 AWG)	3.5 Nm (31 inch lb)

2.2.5 Cable Types

According to EN 60204 or AWG: No. 310-16 of the NEC, column 60 °C or 75 °C is recommended:

Signal		Cable Rating
Alternating Current	Maximum 4 mm² (12 AWG)	600 V,105 °C (221 °F)
DC-link voltage	Maximum 4 mm² (12 AWG)	1000 V,105 °C (221 °F)
Regen resistor	2.5 mm² (14 AWG)	1000 V,105 °C (221 °F)
Motor cable	Maximum 2.5 mm² (14 AWG), shielded, max. 25 m, cable capacitance <150 pF/m	600 V,105 °C (221 °F)
Holding brake	Min. 0.75 mm² (18 AWG), component of the motor cable, shielded separately, note voltage loss	600 V,105 °C (221 °F)
Resolver with thermo contact	4x2x0.25 mm² (24 AWG) twisted pair, shielded, max.25m, cable capacitance <120 pF/m	
EnDAT® signal encoder	7x2x0.25 mm² (24 AWG) twisted pair, shielded, max.25m, cable capacitance <120 pF/m	
+24 V and +24 V-BR input	Maximal 2.5 mm² (14 AWG) (check voltage drop)	

Note: Use 60/75 °C copper wires only!

2.2.6 External Fusing

The AC-mains and 24 V fuses are designed according to the customer requirements for the circuit.

Signal	Fuses, time delay
AC voltage supply (L1-L3) Suitable for use on a circuit capable of delivering not more than 5000 rms symmetrical amperes, 528 volts maximum when protected by RK5 class fuses rated 20 A	The size of the fuse depends on the average power consumption of the connected amplifier. Max. 20 A with 4 mm² (12 AWG) (FRS-25) wires
24 V DC input (24 V, 24 V-BR to BGnd)	16 A slow-blow at 2.5 mm² (14 AWG) for the control
External regen resistor	10 A time delayed, 1200 V (e.g. SIBA 10 022 01, 3-pin-D-Fuse-Link) or FRS-10

2.2.7 Voltage Supply Options

The main voltage supply for the DIAS-Drive requires a fixed connection. If the servo amplifier is mounted on a moveable machine part with connector plug, the ground connection has to have a minimum wire size of greater than 10 mm² (8 AWG) because of the high leakage current of the servo amplifier (> 3.5 mA).

When using a ground fault interrupter in the circuit, a Type B FI switch must be used. If an FI switch of Type A is used, a DC ground fault could cause it to malfunction.

Main voltage supply (grounded)

The servo amplifier can be connected directly to a voltage supply with a grounded neutral point without galvanic isolation.

Main voltage supply (non-grounded)

If the servo amplifier is operated in a non-grounded system (IT grid), the danger of over voltage or damage exists. The following measures can be taken to provide protection against over voltage:

- Use of a galvanically insolating transformer with a grounded neutral point on the secondary side. This offers the highest protection.
- Installation of over voltage protection in the voltage supply of the control cabinet.

The servo amplifier is tested according to EN 61800-3 as follows:

- Periodic over voltage between phase conductors (L1, L2, L3) and the amplifier housing cannot exceed 1000 V (amplitude).
- According to EN61800, the peak voltages (< 50 µs) between the phase conductors cannot exceed 1000 V. Peak voltages (< 50 µs) between the phase conductors and the housing cannot exceed 2000 V..

Note: Non-grounded mains supplies always require additional surge protection in the mains input.

High voltage supply

If the input supply voltage exceeds the specified maximum value, a suitable transformer is required to reduce it.

2.2.8 Usage of Cooling Devices

The Servo amplifier functions up to an ambient temperature of 45° C (55° C with reduced power). Under some circumstances, a cooling device is required.

Note: A cooling device always produces condensation water. Important points must therefore be observed:

- Cooling units must be mounted in such a way that no condensation water can drip into the control cabinet.
- Cooling units must be mounted so that condensation water is not distributed over electrical or electronic components.

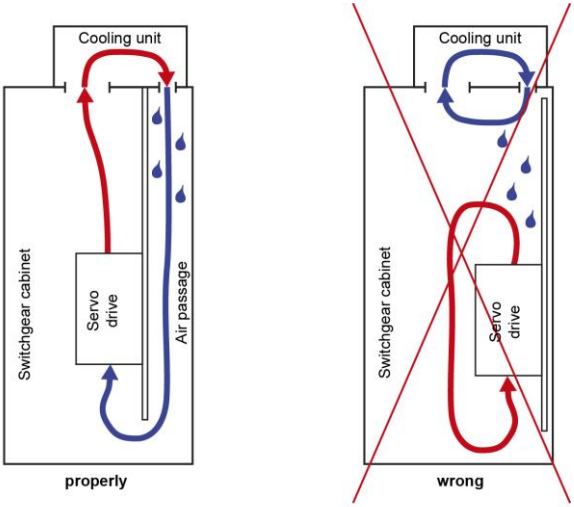

Cooling device mounted in the top of the control cabinet

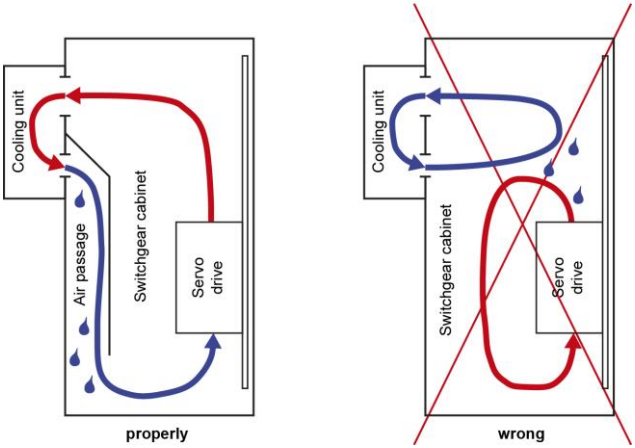

Cooling device mounted in the cabinet door

Condensation water can also be avoided as follows

- The switch point of the temperature regulator should be just below the building temperature.
- In damp environments, the proper seals should be used in the control cabinet.

  If electronic components are colder than the air in the control cabinet, condensation water can accumulate; especially when the cabinet door is opened during servicing.

Note: It must be ensured that the selected cooling plate or cooling system can manage the heat loss of the output stage. Minimum value (without regenerative loss): 10 W / A_{rms}

2.2.9 Turn on/off Response of the Servo Amplifier

The turn on/off response of the servo amplifier is shown below.

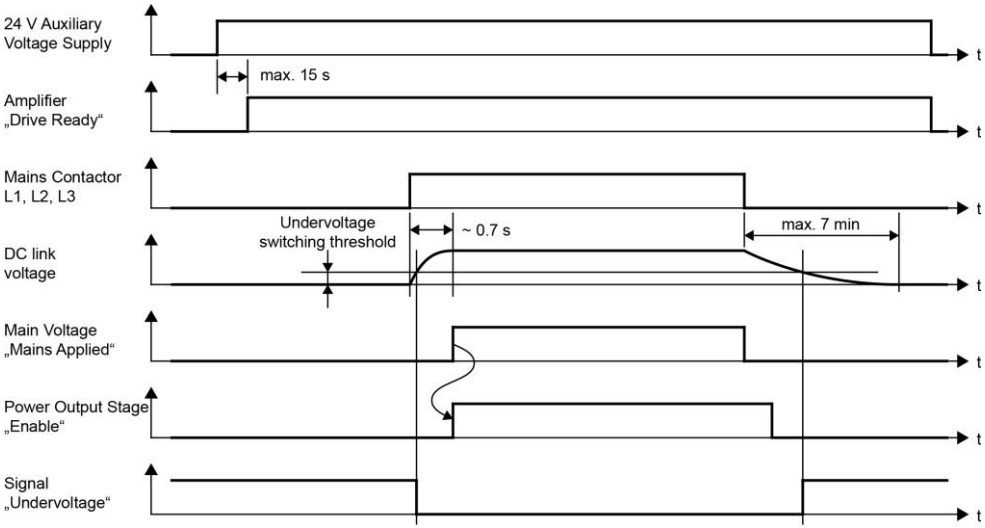

Five seconds after turning on the 24 V auxiliary supply (start time of the micro controller), the "Drive ready" signal is set to high.

The above image shows when the 24 V auxiliary supply activates the system through turning on the main switch and the main supply is engaged later. This, however, is not absolutely necessary. The main supply can also be activated with the 24 V auxiliary supply at the same time.

Since the servo amplifier has a volatile memory, received parameters must be stored in the host controller. The advantage here is in the automatic download of program data when an amplifier is changed.

If the main supply is turned on, the capacitors in the intermediate circuit are loaded. Approximately 0.7 seconds are needed.

If the main supply is turned off, the current of intermediate circuit is maintained and can be used for controlled braking of the motor. If the motor is slowed, the energy is returned to the intermediate circuit.

If the motor is stopped, the "enable" signal can be removed. After 5 minutes, the intermediate circuit is discharged.

2.2.10 Holding Brake Control

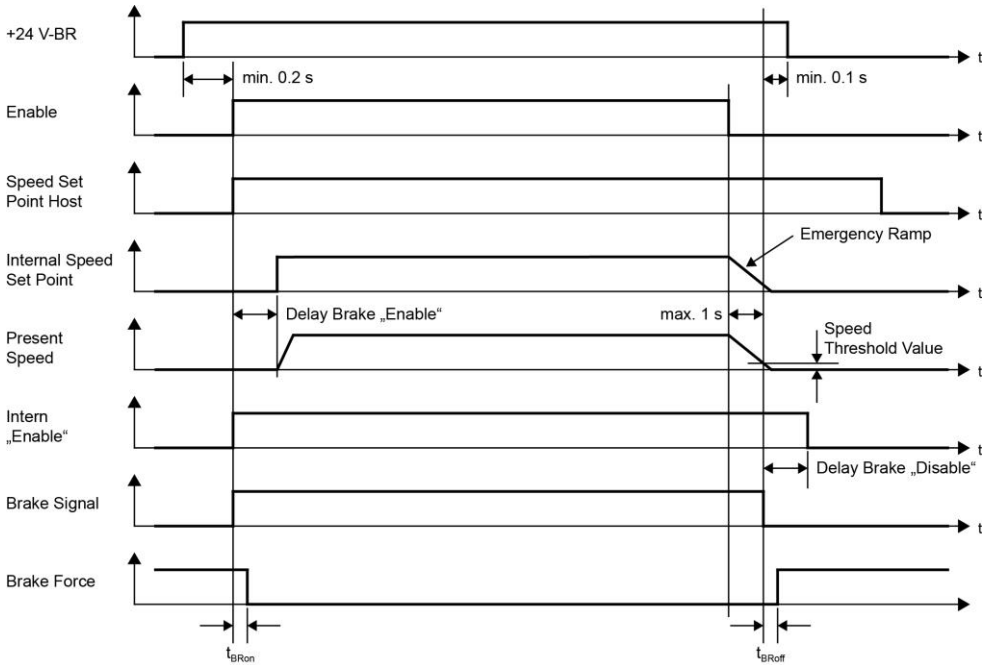

The figure above shows the holding brake function.

A standard holding brake with 24 volts DC and a maximum of 2 Amps can be used on the servo amplifier.

The circuit has a high level of functional safety, but **no personnel safety**.

3 Connections

3.1 Main Power supply (X1B)

The connection to the main supply voltage is designed for voltages from 230 V AC to 480 V AC. When using a non-earthed supply, over voltage protection must be built into the main power supply of the control cabinet.

Note: If within a group of amplifiers, the intermediate circuit is bridged, the input voltage in this group must also be bridged.

3-phase connection:

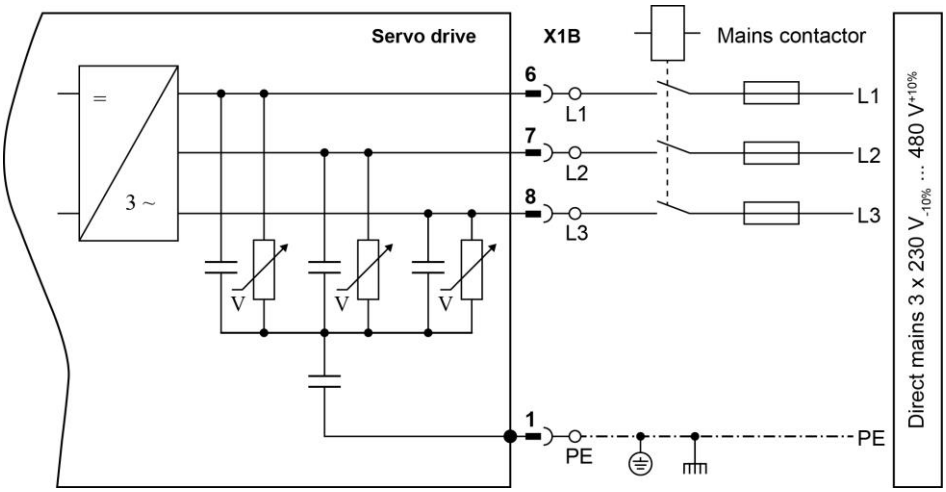

3.2 24 V Auxiliary supply – Holding Brake supply (X1A)

If a 24 V supply is used in the control cabinet to power the relays, coils or other devices, it can also be used for the servo amplifier (the maximum current of the supply must be taken into consideration).
To deactivate the stop brake independently from the 24 V auxiliary voltage, the amplifier has an additional input +24 V-BR.

Note: The mass of the 24 V power supply must be connected to ground near the supply.

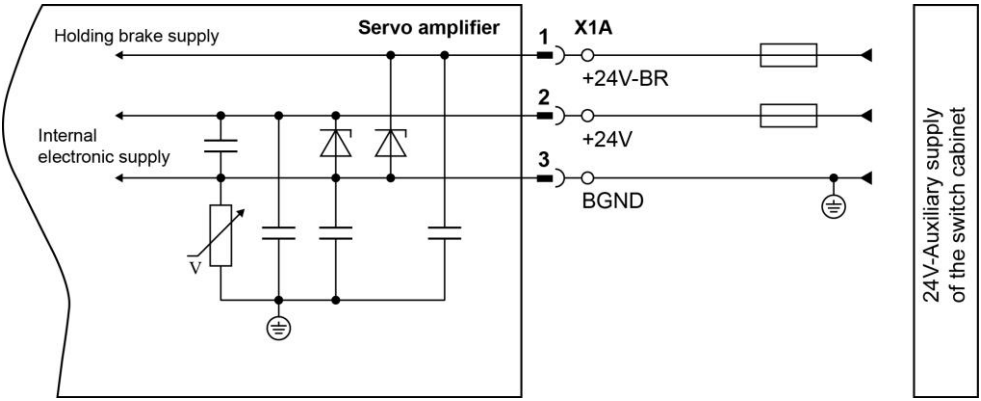

3.3 DC-link (X1B)

To bridge the DC-link voltage with other servo amplifiers, the X1B/2 (+DC) and 3 (-DC) connectors can be used.
The intermediate circuit power can be distributed to different servo amplifiers with this method.

Note: If the intermediate circuit is bridged within a group of amplifiers, the main power supply in this group must also be bridged.

3.4 External Regen Resistor (X1B)

The connection of the external regen resistor is made to the terminals 2 and 5 of X1B (bridge between the Rint and Rtr must, if installed, be removed). The fuse on both connections of the external brake resistor is mandatory. 1000 V DC fuses with slow trigger characteristics must be used.

Note: The external resistor needs the fuse, not to protect the regen resistor, but to protect the cable in the event of short circuit condition. The amplifier has electronic protection for the regen resistor.

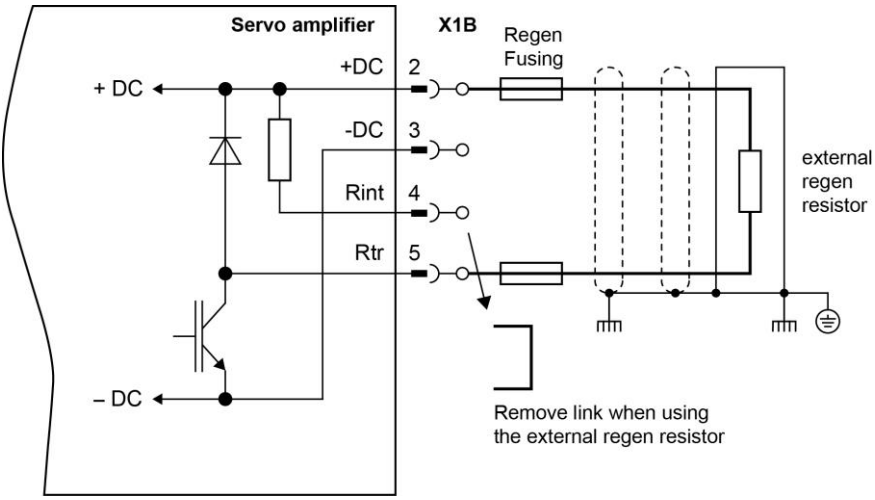

3.5 Motor Connection (X3, X4, X5)

3.5.1 Standard configuration

The cable length for the motor is limited to 25 m. If a longer cable is used, additional suppression coils in the motor output are required.

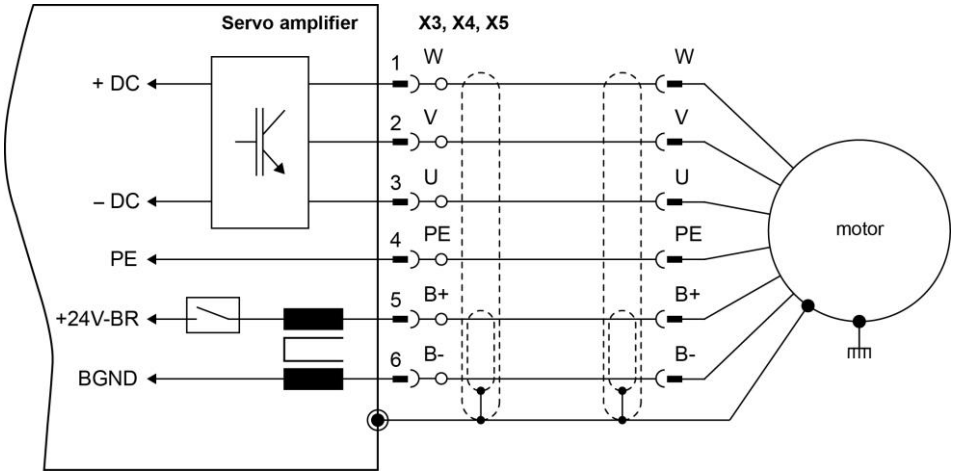

3.5.2 Classic Emergency Stop Functions (Stop Category 0)

The cable length for the motor is limited to 25 m. If a longer cable is used, additional suppression coils in the motor output are required.

Note: The K_{EM} coil must be turned on before the amplifier is enabled and can be turned off after at least 1 ms after the amplifier is "disabled.

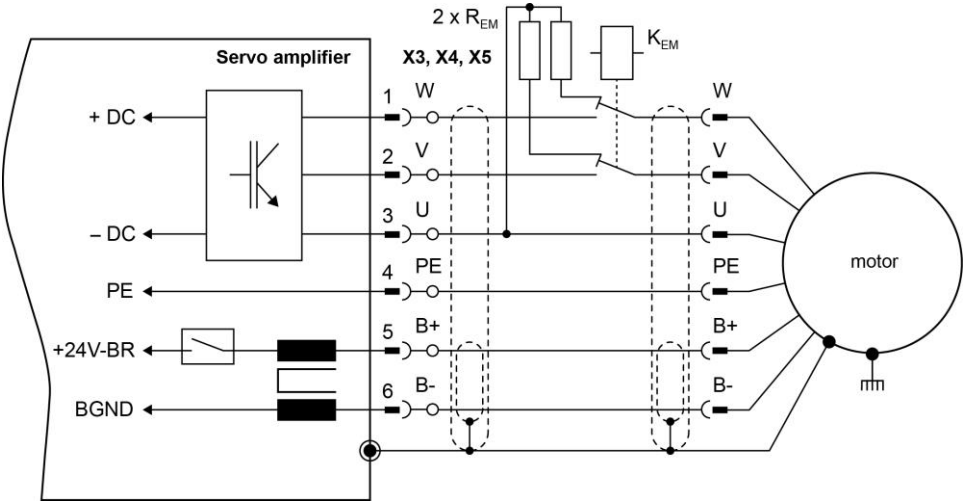

The resistance value and the power of the R_{EM} resistor are calculated using the following formulas:

$$R_{EM}[\Omega] = \frac{\max SPEED \cdot K_{Erms}}{I_{\max} \cdot 0.8} \qquad P_{EM}[W] = \frac{(I_{\max} \cdot 0.8)^2 \cdot R_{EM}}{10}$$

maxSPEED	maximum revolutions [RPM]
I_{max}	maximum motor current allowed [A]
K_{Erms}	voltage constant of the motor [V*min]

3.5.3 Personnel-Safe Holding Brake Control

The servo amplifier has a high reliability in the brake control.

If a personnel-safe holding brake control is required, an additional safety contact in the +24V-BR voltage path in keeping with the safety standards is needed.

Despite this, the danger of injury and/or damage to the machine still exists with a mechanical defect in the holding brake.

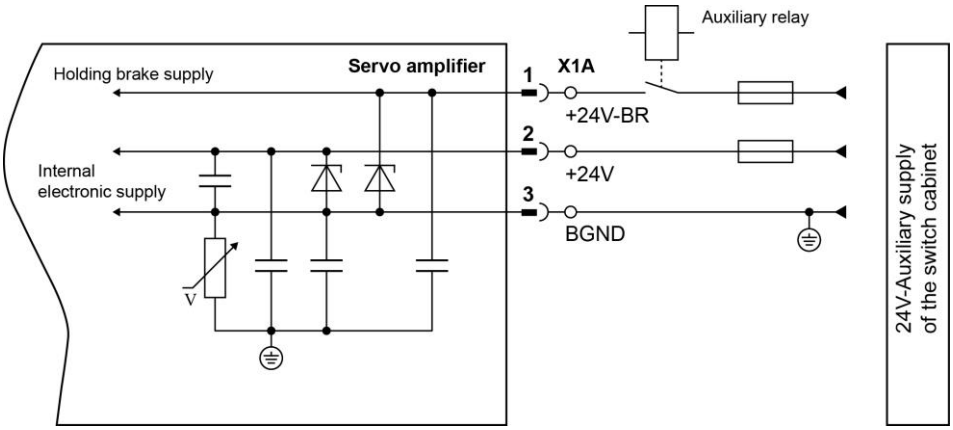

3.6 Feedback (X6, X7, X8)

The servo amplifier has various feedback inputs for different feedback devices.

- Resolver Feedback with thermo contact
- EnDAT® encoder (single and multi-turn)
- Hiperface® encoder (single and multi-turn)
- Sin/Cos & TTL Encoder

For EnDat, Hiperface, Sin/Cos and TTL encoder systems, the current maximum number of feedback signals of 8192 per mechanical turn is supported (M-RPULSE).

3.6.1 Resolver Feedback

A resolver is used as the standard feedback. The Servo amplifier supports the analysis of single-speed (2-pin) and multi-speed resolvers (up to 32 pins). The maximum cable length is 50 m. If a thermo contact is used, the signal is also wired into the resolver cable.

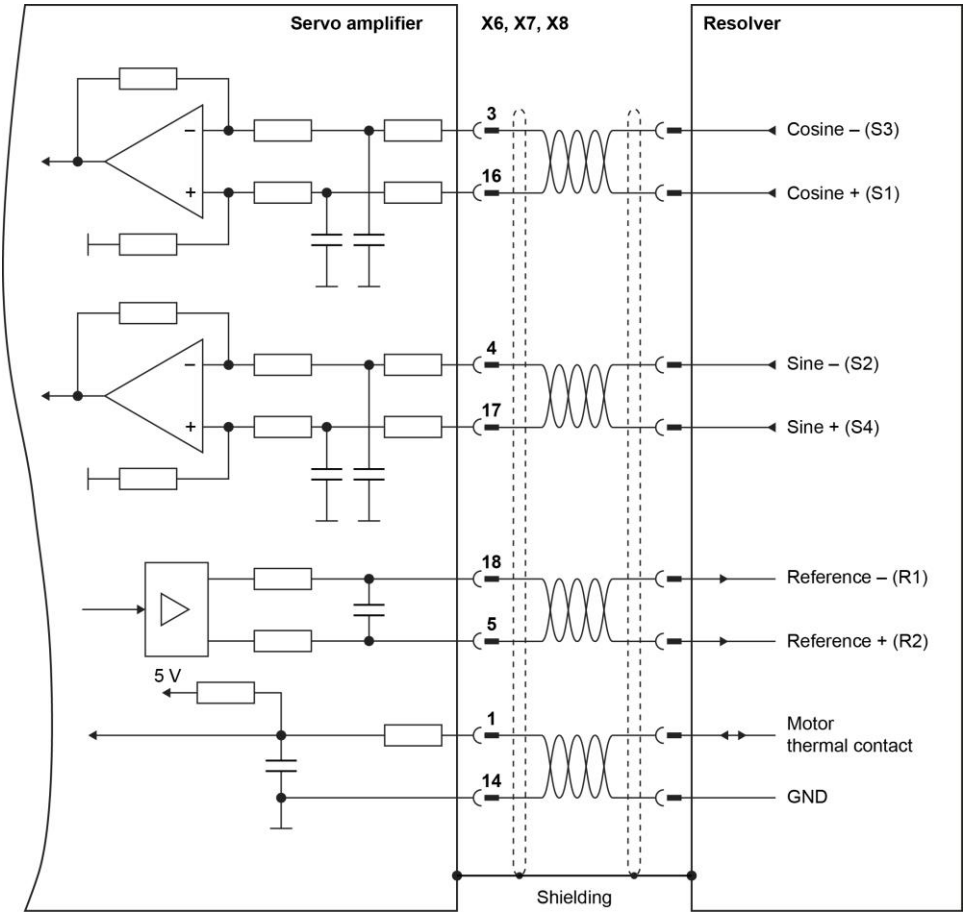

3.6.2 EnDAT® Signal Encoder

The EnDAT® encoder is a high-resolution feedback system for motors. The cable length is limited to 25 m. If a thermo contact is used, the signal is transmitted through the feedback cable.

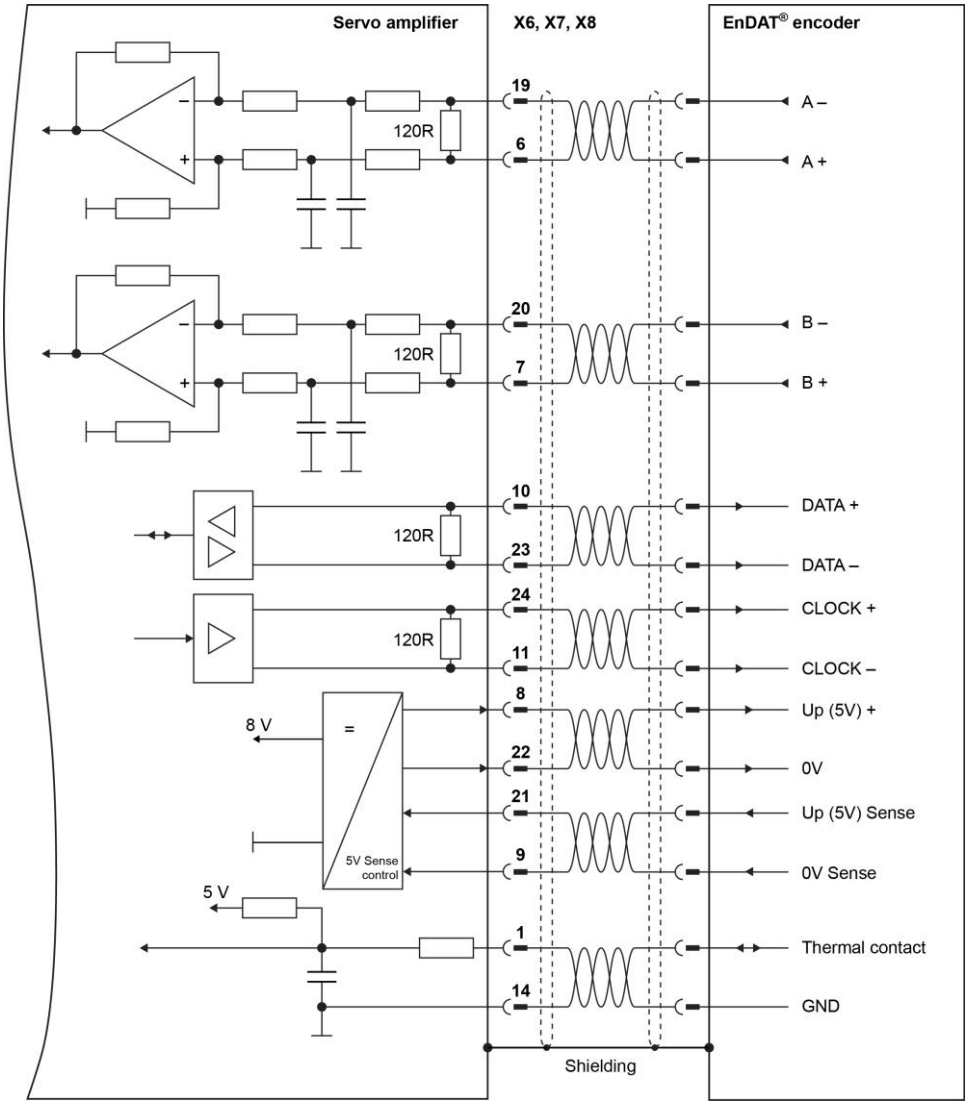

3.6.3 Hiperface® Signal Encoder

The signal encoder with a Hiperface® interface is a high-resolution feedback system for motors. The cable length is limited to 25 m.

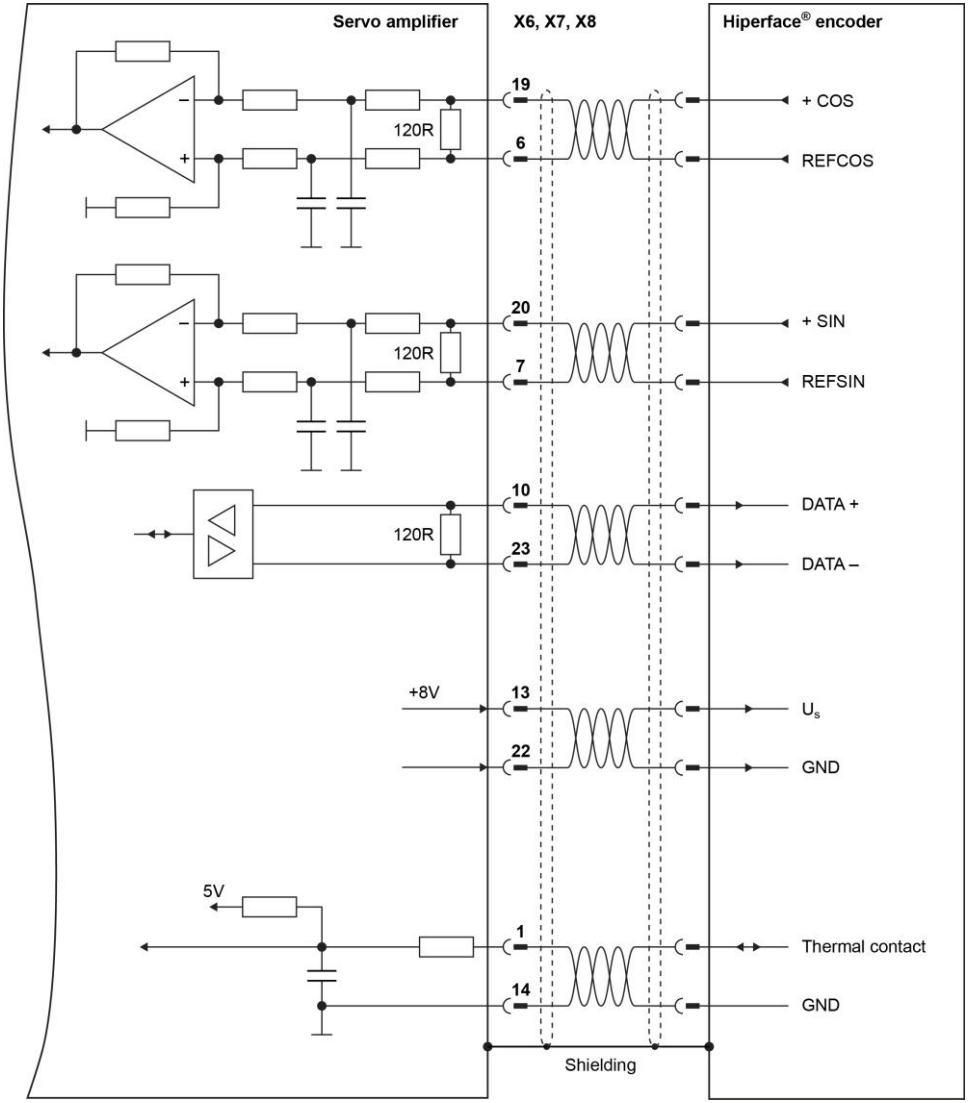

3.6.4 Sine/Cosine & TTL Encoder Feedback

A sine encoder is a high-resolution feedback system, used with linear or torque servomotors. The maximum cable length is 10 m. If a thermo contact is used, the signal is wired into the resolver cable.

The upper frequency limit for TTL encoders is 100 kHz. The reference signal is not evaluated in the amplifier.

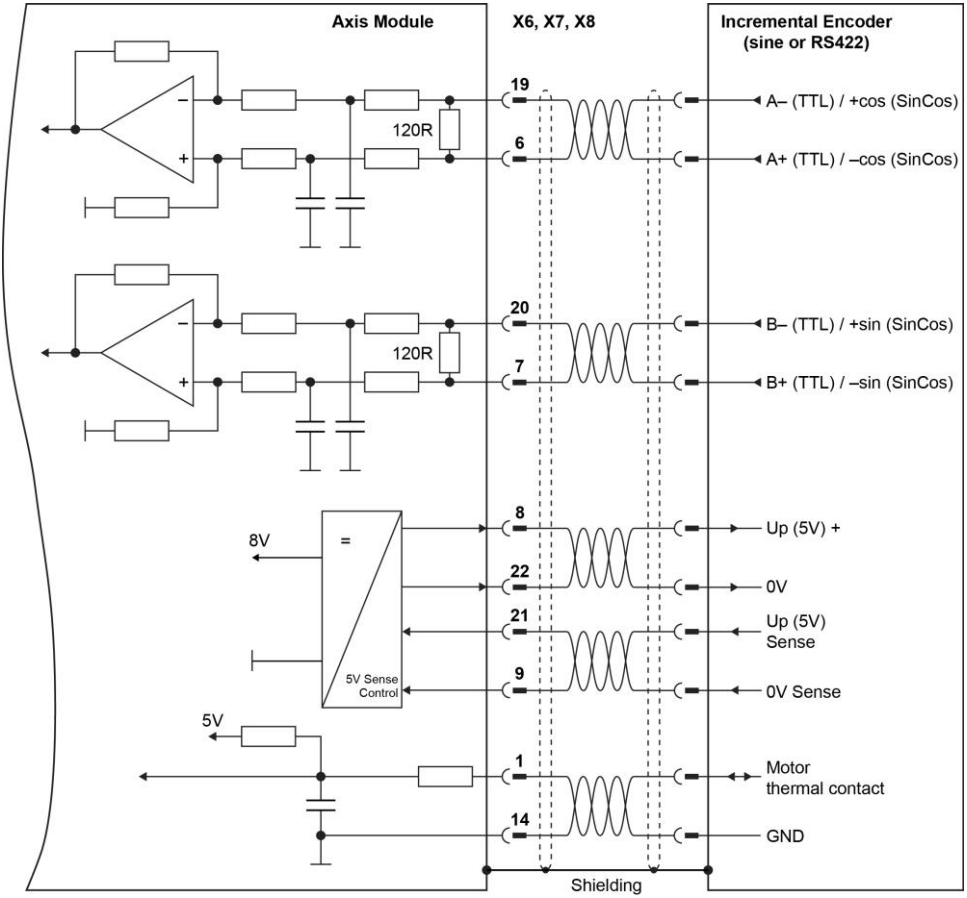

4 Maintenance

The servo amplifier is maintenance-free.

Note: Opening the housing results in the loss of warranty.

Dirt on the housing can be removed with isopropyl alcohol or similar products.

- Contamination in the device must be removed by the manufacturer.
- Dirty fan grates can be cleaned with a dry brush.
- Spraying or submersion is not allowed.

4.1 Replace and Repair

Repair: Repair of the servo amplifier must be performed by the manufacturer.

Replace: If a servo amplifier must be replaced, the following checklist must be observed (no special mounting tools are required):

Turn off the control cabinet supply and remove the servo amplifier fuses.

↓

After disconnecting the servo amplifier from the main voltage supply, a wait-time of 5 minutes is required before current-conducting components in the amplifier (e.g. contacts) can be touched or connectors removed. Capacitors can contain dangerous voltages for up to 5 minutes after the supply voltage is removed. It is necessary to wait until the DC-link voltage is below 40 V.

↓

During operation, the heat sink of the servo amplifier can reach temperatures of over 80 °C (176 °F). The heat sink temperature should be checked before handling and it may be necessary to wait until it is below 40 °C (104 °F).

↓

Disconnect the contact plug.
The connectors should be labeled to avoid confusing them later.

↓

The servo amplifier can be dismantled.

↓

The replacement unit must be compared with the original amplifier;
only identical amplifiers can be used.

↓

Reestablish the connection. The connectors must not be crossed.

↓

Insert the fuse for the servo amplifier,
turn on the main switch in the control cabinet,

↓

Check whether the correct parameters where loaded into the amplifier.

5 Appendix

5.1 Transport, Storage and Disposal

Transport:

- For transport, the original recyclable packaging from the manufacturer must be used.
- During transport dropping should be avoided.
- The storage temperature must be between –25 and +70 °C (-13 ... 158 °F), max. change 20 K/h.
- The maximum humidity is 95 %, non-condensing
- The servo amplifier contains electrostatic-sensitive components, which can be damaged by improper handling. Before touching the servo amplifier, the user must discharge their body by touching a grounded object with a conductive surface. Contact with highly insulated material (synthetic fibre, plastic foil etc.) must be avoided. The servo amplifier must be placed on a conductive surface.
- If the packaging is damaged, the amplifier must be visually inspected for damage. If damaged, the transport company and the manufacturer must be informed. The amplifier should not be installed and operated if damaged.

Packaging:

- Recyclable cardboard with liner
- Dimensions: 500 mm x 300 mm x 400 mm (width, height, depth)
- Labelling: nameplate on the outer side of the box

Storage:

- Only the original recyclable packaging from the manufacturer can be used
- The servo amplifier contains electrostatic-sensitive components, which can be damaged by improper handling. Before touching the servo amplifier, the user must discharge their body by touching a grounded object with a conductive surface. Contact with highly insulated material (synthetic fibre, plastic foil etc.) must be avoided. The servo amplifier must be placed on a conductive surface.

- A maximum of 6 servo amplifiers can be stacked on top of one another.
- The storage temperature must be between –25 and +70 °C (-13 ... 158 °F), max. change 20 K/h.
- The maximum humidity 95 %, non-condensing.
- Storage time:
  < 1 year: without limitations
  ≥ 1 year: The intermediate circuit capacitors of the servo amplifier must be reformed before the initial startup. In addition, all electrical connections must be removed and the servo amplifier supplied with 230 V AC, single phase at terminals L1 / L2 for 30 min.

Disposal:

- The servo amplifier can be disassembled by removing the screws in its main components (heat sink, steel housing, circuit boards).
- Disposal should be carried out by certified companies.

5.2 Correcting Errors

Errors and warnings are displayed via LED and over the bus system. On page 51 under "Status Register", the various errors that can occur are described,

5.2.1 LED Display

The DIAS-Drive has two LED's, which display the status of the amplifier.

LED		Description
Green	**Red**	
On	**On**	Controller in boot mode (Firmware damaged or not available)
1 Hz flashing	**Off**	Ready to start
8 Hz flashing	**Off**	Output current is limited by the I2T value (one or more axes)
On	**Off**	Operation
On	**1 Hz flashing**	Warning
Off	**On**	Error

5.2.2 Amplifier Malfunctions

Malfunctions of the drive	Possible Causes	Solution
When the motor is turning in the clockwise direction (observe the motor shaft) I-FPOS decreases	Resolver not functioning correctly Resolver connected incorrectly	Check resolver Connect the resolver according to the wiring diagram (see page 40 et seq.)
Motor does not rotate **Motor current has reached limit, however, without torque**	Motor is not connected correctly	Check connections on motor terminal board U, V, W
The Motor "spins through" **The motor torque is too low or different in the directions**	***M-ROFF*** is not set to the right value Motor and/or feedback is connected incorrectly	Check the ***M-ROFF*** parameter Check the motor and feedback connection
Motor stops at certain positions	The setting of ***M-POL*** and/or ***M-RPOL*** is incorrect The motor cable has a wire break The motor cable is not connected to all wires	Check the ***M-POL*** and ***M-RPOL*** parameters corresponding to the motor data. Replace motor cable (especially for drag chains) Check motor cable connections
The motor oscillates	Control gain too high Shielding of the feedback cable has a defect	Reduce ***V-KP*** and/or ***P-KV*** Check the feedback cable and exchange it if needed. (especially with drag chains)

5.2.3 Status Register

With ***I-STATUS***, the status of the DIAS-Drive can be read. All error and status information is contained in a 32-bit variable. The amplifier function can be changed by setting the appropriate bits via using the ***G-MASKE1***, ***G-MASKE2***, ***G-MASKW*** and ***G-MASKD*** commands.
According to the mask settings the amplifier detects errors, warnings or does not respond. The individual bits have different values and limitations in the mask assignment.

Bit	Error	Cause	Solution
0	**Single-phase operation**	The main supply voltage is single phase only	Check the amplifier fuse Check electrical connection
1	**Error in the main voltage supply**	Amplifier is "enabled" without the applied main voltage supply	Check fuses in the mains supply Check electrical supply Amplifier is enabled before the DC-link voltage is loaded
2	**reserved**		
3	**DC over voltage**	External regen resistor not connected External regen resistor defective	Connect regen resistor Replace external regen resistor
4	**DC under voltage**	The main voltage supply for the enabled amplifier is too low	Disable amplifier before the DC-link voltage crosses the under-voltage threshold set by ***G-VBUSM***
5	**reserved**		
6	**Holding brake error**	No holding brake connected with parameter ***M-BRAKE*** = 1 Short circuit in holding brake cables Short circuit in the holding brake	Use motor with holding brake Check holding brake cable Change ***M-BRAKE*** parameter to 0 as long as a motor without brakes is used. Check connector and motor cable Check holding brake
7	**Brake switch error**	Defective internal stop brake switch No holding brake connected with parameter ***M-BRAKE*** = 1	Replace amplifier Use motor with holding brake Change ***M-BRAKE*** parameter to 0 as long as a motor without brakes is used. Check connector and motor cable Check holding brake
8	**reserved**		

9	**Motor temperature**	Motor temperature switch is triggered Break in feedback cable or connectors	Check cause (Motor under-dimensioned, poor environmental conditions) Check feedback cable and connector, exchange if necessary
10	**Environmental temperature**	Internal temperature too high	Improve ventilation in the cabinet and check mounting position according to this manual
11	**Heat sink temperature**	Heat sink temperature too high	Improve ventilation in the cabinet and check mounting position according to this manual
12	**Feedback error**	Feedback cable broken Feedback device defective Bad feedback connection	Check feedback cable and replace if necessary Replace feedback device Check feedback connection
13	**Commutation error**	Incorrect motor phase position Wrong wiring of motor or feedback cable	Check ***M-ROFF*** Check motor connection
14	**Motor over speed**	Incorrect motor phase position Incorrect motor connection or wrong feedback cable Over shoot (greater than 1.2 * *V-NMAX*)	Check ***M-ROFF*** Check motor connection Check feedback cable Optimize control loop
15	**Drag error**	***P-PEMAX*** lag window too small	Increase ***P-PEMAX*** and/or optimize control loops
16	**Trajectory error**	The speed setting, which was calculated using the change in the position setting by the host, is higher than 10000 U/min^{-1}	Check ***P-PSCALE*** and ***P-SSCALE*** parameters and the reference value of the controller
17	**Host communication**	No new preset values were transmitted for two successive cycles Internal communication error with the interface	Synchronization is not engaged; check ***A-CTIME*** and the cycle time of the control Check ***A-STIME*** Communication disrupted, check see also ***I-DERROR***
18	**Amplifier error E2 (I-DERROR)**	Various internal errors	see also ***I-DERROR*** Contact manufacturer

19	**Amplifier error E1 (I-DERROR)**	Various internal errors	see also ***I-DERROR*** Contact manufacturer
		Power output error: Motor cable has a ground fault Motor has a ground fault Output stage defective	 Check motor cable, replace if necessary Replace motor Replace amplifier
		Ballast circuit error Regen resistor cable has a ground fault Regen resistor has ground fault Regen output stage is defective	 Replace regen resistor cable Replace regen resistor Replace amplifier
20	**"Enable locked" error**	The amplifier is "enabled" via the software when one of safety inputs still has a "low" signal.	Enable amplifier only if ENABLE and EN-BRAKE are "high".
21	**Driver voltage error**	The amplifier is "enabled" via the software when LOCK still has a “low” signal.	Enable the amplifier only if the LOCK signal is "high".
22	**DC over voltage and brake resistance limit reached.**	Regen resistor power is insufficient. Brake resistance power has been reached and the resistor was deactivated.	Replace regen resistor Adjust the ***G-MBAL*** value; consider therefore the rated values of the regen resistor (see page 17 et seq.) amplifier is possibly under-dimensioned
23	**Brake supply voltage error**	Holding brake supply 24 V-BR missing. Holding brake switch is defective.	If the motor has a holding brake, the amplifier can only be "enabled" when 24 V-BR is applied to the brake. Replace amplifier
24	**reserved**		
25	**I2T error**	***I-I2T*** exceeds the warning value ***A-I2TERR***	Increase ***A-I2TERR***
26	**Motor temperature warning**	***I-TEMPM*** exceeds the warning value ***A-TEMPMW***	Increase ***A-TEMPMW***
27	**Motor parameter error**	M parameters were not found in the encoder when using motors with an EnDAT® or HIPERFACE® encoder.	M parameters were not loaded into the encoder Encoder defective. Defective signal lines or connectors, faulty wiring or broken cables.
28	**Multi-turn error**	When using an EnDAT® or HIPERFACE® multi-turn encoder, an error has occurred at the extension at >4096 turns.	Motor with multi-turn encoder was replaced Encoder defect

29	**Total power limit reached**	The power of all axes has exceeded the maximum load.	Reduce the load Drive is insufficiently dimensioned
30	**reserved**		
31	**reserved**		

6 DIAS Drive 300 Accessories

6.1 Shielding Plate with Strain Relief

(Article number: 09-501-101-Z1)

The shielding plate with strain relief is used to secure the DIAS Drives cables.

Included in delivery are:

1 pcs. Strain Relief
(Mounting on the upper side of the DIAS Drives)

2 pcs. Allen screws
Type M5

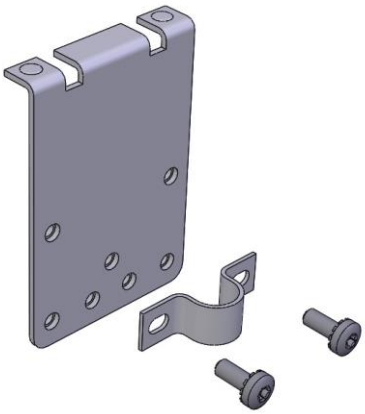

6.1.1 Mounting Instructions

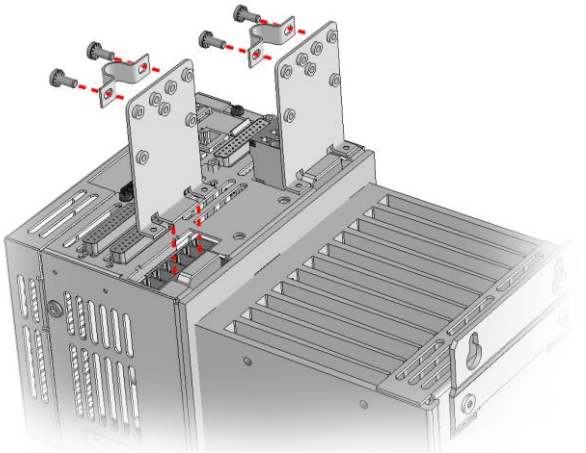

Remove the appropriate connector. Insert the strain relief into the slots provided. The reconnected plug holds the strain relief in position.

Run the cable through the clamps and secure it to the strain relief using the two screws.

6.2 Mounting Set

(Article number: 09-501-101-Z2)

The fixing (mounting) set serves for mounting the DIAS-Drive in the switchgear cabinet. By doing so, the amplifier's fan block is located outside of the switchgear cabinet (better ventilation). An appropriate recess in the switchgear cabinet must be provided.

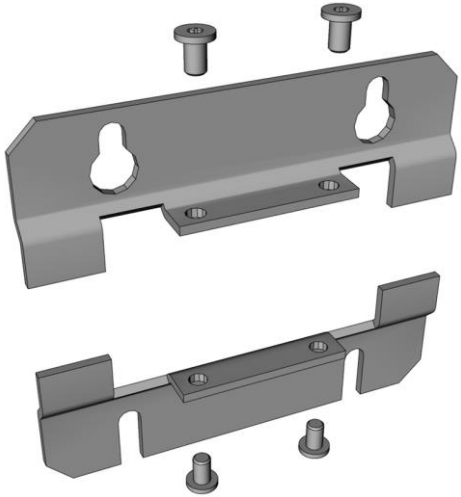

Included in delivery are:

2 pcs. Mounting Bracket
(mounting on the upper or lower side of the DIAS Drive)

4 pcs. Allen screws
Type M5

6.2.1 Mounting Instructions

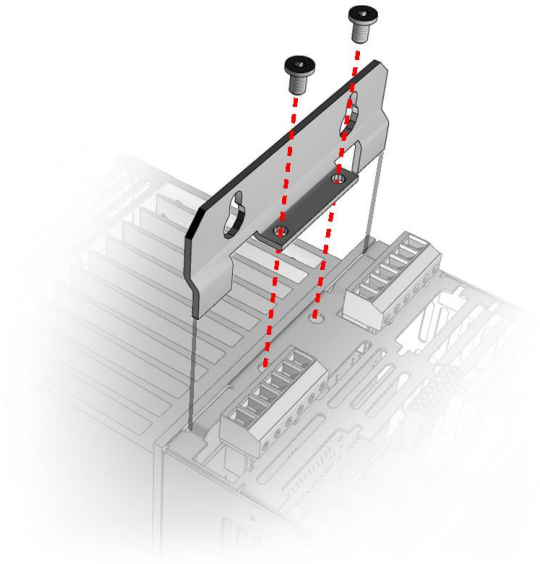

Mounting on the **upper side** of the amplifier.

Place the mounting bracket in the provided slots and secure it with both screws.

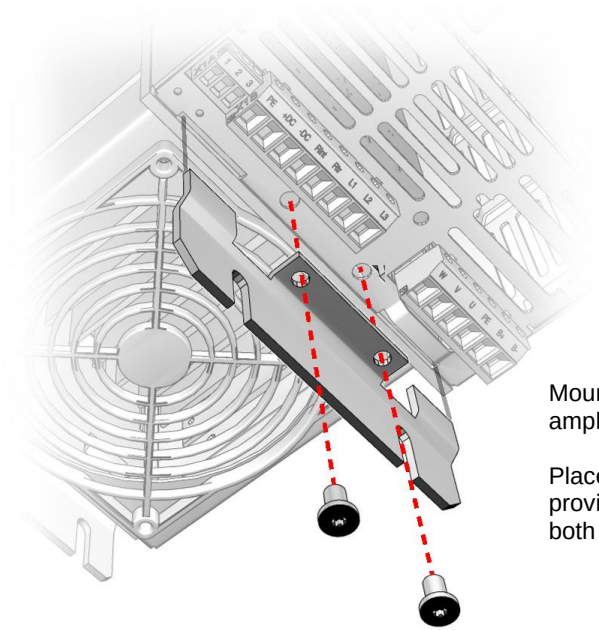

Mounting on the **lower side** of the amplifier.

Place the mounting bracket in the provided slots and secure it with both screws.

Documentation Changes

Change date	Affected page(s)	Chapter	Note
10.05.2011	9		IP54
04.07.2011			Documentation edited, Marks deleted UL Notes added: - Chapter 1.9 - Chapter 1.10 - Chapter 2.2.5 - Chapter 2.2.6
20.07.2011	22, 42		Connections of Resolver feedback corrected
27.10.2011	12 13 17 22 37 51		Deleted external regen resistor Changed 3rd bullet statement Added resolver specification Removed X2 and X2B in graphic Changed description Changed cause of Bit 3
16.11.2011	22		Changed assignment of the pins 6, 7, 19 and 20 in the graphic
07.03.2012	24		Changed graphic
20.03.2012	18		Note added
14.06.2012	22 41 45		Changed graphic Added Sin/Cos & TTL Encoder and notice Added Sine/Cosine & TTL Encoder feedback
03.09.2012	9		Changed 7th bullet
14.01.2013	22		Updated plug connection graphic
01.10.2013			Exchanged all product-specific graphics
27.05.2014	19 20		Added leakage currents notice Added shelf life notice
25.06.2014	11		Nameplate updated
17.07.2014	16		Max. holding brake switching energy added
30.10.2014	31		Added note

30.04.2015	45		Sine/Cosine & TTL Encoder feedback changed
08.05.2015	35		main input ←→ DC-link
08.02.2016	Document		AWG corrected Shielding Plate extended
31.05.2017	17		max. standstill current added
19.07.2017	10		Added note regarding the star-connection
27.09.2017	7		Added warning regarding EMF
21.05.2019	Dokument		Standards updated
19.02.2020	1	Nameplate	Picture exchanged Chapter removed
25.01.2021	17	1.8 Technical Data	PWM frequency and Regulator frequency added