SIGMATEK

HGT 1053

10.1" Handheld Operating Panel

Operating Manual

Date of creation: 23.02.2021 | Version date: 01.02.2022 | Article number: 01-245-1053-E

Publisher: SIGMATEK GmbH & Co KG
A-5112 Lamprechtshausen
Tel.: +43/6274/4321
Fax: +43/6274/4321-18
Email: office@sigmatek.at
WWW.SIGMATEK-AUTOMATION.COM

Translation from German

10.1" Handheld Operating Panel HGT 1053

The HGT 1053 is an intelligent panel for visualizing, operating and monitoring automated processes. Process diagnostics is therewith simplified.

The handheld operating panel has the following Safety components:

- Emergency stop switch
- Key switch
- Confirmation switch

A projective capacitive touch screen serves as the input medium for process data and parameters. The output is shown on a 10.1-inch TFT color display (WXGA 800 x 1280) with LED backlighting.

With the LASAL visualization tool, graphics can be created on the PC, then stored and displayed on the handheld operating panel. The available interfaces can be used to exchange process data or configure the handheld operating panel. The operating system, application and application data are stored on the internal storage medium.

The Safety functions can be implemented via the connection to a Safety controller SCP 111.

The connector cable is optionally available with various connectors.

Table of Contents

1 Introduction

1.1 Target Group/Purpose of this Operating Manual

This operating manual contains all information required for the operation of the product.

This operating manual is intended for:

- Project planners
- Technicians
- Commissioning engineers
- Machine operators
- Maintenance/test technicians

General knowledge of automation technology is required.

Further help and training information, as well as the appropriate accessories can be found on our website www.sigmatek-automation.com.

Our support team is happily available to answer your questions.
Please see our website for our hotline number and business hours.

1.2 Important Reference Documentation

- Safety System Handbook
- Documentation Connection Cables for Operating Devices
- HW IP Address Settings

This and additional documents can be downloaded from our website or obtained through support.

1.3 Contents of Delivery

1x HGT 1053
2x keys

2 Basic Safety Guidelines

2.1 Symbols Used

The following symbols are used in the operator documentation for warning and danger messages, as well as informational notes.

DANGER

Danger indicates that death or serious injury **will occur**, if the specified measures are not taken.

→ To avoid death or serious injuries, observe all guidelines.

Danger indique une situation dangereuse qui, faute de prendre les mesures adéquates, **entraînera** des blessures graves, voire mortelles.

→ Respectez toutes les consignes pour éviter des blessures graves, voire mortelles.

WARNING

Warning indicates that death or serious injury **can** occur, if the specified measures are not taken.

→ To avoid death or serious injuries, observe all guidelines.

Avertissement d'une situation dangereuse qui, faute de prendre les mesures adéquates, **entraînera** des blessures graves, voire mortelles.

→ Respectez toutes les consignes pour éviter des blessures graves, voire mortelles.

CAUTION

Caution indicates that moderate to slight injury **can** occur, if the specified measures are not taken.

→ To avoid moderate to slight injuries, observe all guidelines.

Attention indique une situation dangereuse qui, faute de prendre les mesures adéquates, **peut** entraîner des blessures assez graves ou légères.

→ Respectez toutes les consignes pour éviter des blessures graves, voire mortelles.

DANGER

Danger for persons with pacemakers, implanted defibrillators or other active implants.

Danger pour les personnes portant un stimulateur cardiaque, un défibrillateur implanté ou d'autres implants actifs

WARNING

Magnetic field warning

Alerte au champ magnétique

CAUTION

Danger for ESD-sensitive components.

Les signes de danger pour les composants sensibles aux décharges électrostatiques.

INFORMATION

INFORMATION

→ Provides important information on the product, handling or relevant sections of the documentation, which require particular attention.

2.2 Disclaimer

INFORMATION

The contents of this operating manual were prepared with the greatest care. However, deviations cannot be ruled out. This operating manual is regularly checked and required corrections are included in the subsequent versions. The machine manufacturer is responsible for the proper assembly, as well as device configuration. The machine operator is responsible for safe handling, as well as proper operation.

The current operating manual can be found on our website. If necessary, contact our support.

Subject to technical changes, which improve the performance of the devices. The following operating manual is purely a product description. It does not guarantee properties under the warranty.

Please thoroughly read the corresponding documents and this operating manual before handling a product.

SIGMATEK GmbH & Co KG is not liable for damages caused through, non-compliance with these instructions or applicable regulations.

2.3 General Safety Guidelines

The Safety Guidelines in the other sections of this operating manual must be observed. These instructions are visually emphasized by symbols.

INFORMATION

According to EU Guidelines, the operating manual is a component of a product.
This operating manual must therefore be accessible in the vicinity of the machine since it contains important instructions.
This operating manual should be included in the sale, rental or transfer of the product, or its online availability indicated.
Maintain this operating manual in readable condition and keep it accessible for reference.

Regarding the requirements for Safety and health connected to the use of machines, the manufacturer must perform a risk assessment in accordance with machine guidelines 2006/42/EG before introducing a machine to the market. Before commissioning this product, check that conformance with the provisions of the 2006/42/EG guidelines is correct. As long as the machine with which the product should be used does not comply with the guideline, operating this product is prohibited.

Operate the unit with devices and accessories approved by SIGMATEK only.

CAUTION

Handle the device with care and do not drop or let fall.
Prevent foreign bodies and fluids from entering the device.
The device must not be opened, otherwise it could be damaged!

Manipulez l’appareil avec précaution et ne le laissez pas tomber.
Empêchez les corps étrangers et les liquides de pénétrer dans l’appareil.
L’appareil ne doit pas être ouvert, sinon il risque d’être endommagé!

Regularly check the housing for mechanical damage.

Vérifier régulièrement l’absence de dommages mécaniques sur le boîtier.

The module complies with EN 61131-2.
In combination with a machine, the machine builder must comply with EN 60204-1 standards.
For your own safety and that of others, compliance with the environmental conditions is essential.
The control cabinet must be connected to ground correctly.
To perform maintenance or repairs, disconnect the system from the power supply.

Le module est conforme à la norme EN 61131-2.
En combinaison avec une machine, le constructeur de la machine doit respecter la norme EN 60204-1.
Pour votre propre sécurité et celle des autres, le respect des conditions environnementales est essentiel.
L’armoire de commande doit être raccordée correctement à la terre.
Pour l'entretien et les réparations, débranchez le système de l'alimentation.

2.4 Designated Use

The Safety functions implemented in the Safety modules are designed for use with safety applications in a PLC control and meet the required conditions for safe operation according to SIL 3 in compliance with EN 62061 and according to PL e / CAT 4 in compliance with EN ISO 13849-1.

CAUTION

The instructions contained in this operating manual must be followed. For error-free operation, proper transport and storage are essential.
Installation, mounting, programming, initial start-up, operation, maintenance and decommissioning can only be performed by qualified personnel.
Qualified personnel in this context are people, who have completed training or have trained under supervision of qualified personnel and have been authorized to operate and maintain safety-related equipment, systems and facilities in compliance with the strict guidelines and standards of safety technology (Functional Safety).

Les instructions contenues dans ce manuel technique doivent être suivies. Pour un fonctionnement sans erreur, le transport et le stockage appropriés sont essentiels.
L'installation, le montage, la programmation, la mise en service initiale, l'exploitation, la maintenance et la mise hors service ne peuvent être effectués que par une personne qualifiée.
Dans ce contexte, on entend par personnel qualifié les personnes qui ont suivi une formation ou qui ont été formées sous la supervision d'un personnel qualifié et qui ont été autorisées à utiliser et à entretenir l'équipement, les systèmes et les installations de sécurité conformément aux directives et aux normes strictes de la technique de sécurité (Sécurité fonctionnelle).

For your own safety and that of others, the safety modules should be used for their designated purpose only.
Correct EMC installation is also included under designated use.

Pour votre propre sécurité et celle des autres, les modules de sécurité ne doivent être utilisés qu'à des fins prévues.
Une installation CEM correcte est également incluse dans l'utilisation prévue.

Non-designated use consists of:

- any changes made to the module or the use of damaged modules.
- use of the module inconsistent with the technical margins described in this operating manual or the speciation's defined in the technical data.

L'utilisation non désignée consiste en:

- toute modification apportée au module ou l'utilisation des modules endommagés.
- sation du module non conforme aux marges techniques décrites dans ce manuel ou aux spécifications définies dans les données techniques.

CAUTION

As required by EN ISO 13850, section 4.1 and EN 60204-1, section 10.7.1, confusion between a functioning and non-functioning handheld operating panel is possible must be prevented.

Conformément à la norme EN ISO 13850, section 4.1 et EN 60204-1, section 10.7.1, la confusion entre un panneau de commande portatif fonctionnel et non fonctionnel doit être évitée.

If an operating panel is not coupled and not in use, keep it in a location with restricted access.

Si un panneau de commande n'est pas couplé et n'est pas utilisé, conservez-le dans un endroit à accès restreint.

INFORMATION

Hardware and software features (application-specific data) can be found in chapter 20 Application Information.

2.5 Software/Training

The application is created with the software LASAL CLASS 2 and LASAL SCREEN Editor / VISUDesigner (HTML5), the Safety application is created using the SAFETYDesigner. Basic information on Safety (Functional Safety) can be found in the Safety System Handbook.

Training for the LASAL development environment, with which the product can be configured, is provided. Information on our training schedule can be found on our website.

3 Standards and Guidelines

3.1 Residual Risks

CAUTION

According to the EU guideline 2006/42/EG (machine guideline), the machine manufacturer must perform a risk assessment, which includes the possible residual risks posed by the product. These include:

- unwanted movements of driven machine components
- unwanted temperatures, emissions of gas, particles, smell and light
- dangerous contact voltages
- the effects of electrical, magnetic and electromagnetic fields produced during operation (for example, on pacemakers and implants)
- possible effects of information technology devices (cell/smart phones etc.)
- release of non-environmentally compatible substances and emissions

3.2 Safety of the Machine or Equipment

Strict compliance with the safety guidelines is required, otherwise all warranties and claims are invalid.

INFORMATION

Observe all on-site rules and regulations for accident prevention and occupational safety.

3.3 Regular Technical Inspection of the Emergency Stop

CAUTION

The emergency stop should be regularly checked for manipulation and damage.

L'arrêt d'urgence doit être vérifié régulièrement pour vérifier qu'il n'a pas subi de manipulations ou de dommages.

3.4 Regular Technical Inspection of Safety-oriented Switches

CAUTION

According to the machine guideline, mechanical and electromechanical safety-oriented components (e.g. relays, switches, etc.) must be regularly checked for correct function.

Emergency stop switch: at least 1x/month
Key switch: at least 1x/year
Confirmation switch: at least 1x/year

Please note the requirements of your machine. Due to Type C standards or other guidelines, requirements could differ regionally.

3.5 Guidelines

The product was constructed in compliance with the following European Union guidelines and tested for conformity.

3.5.1 Functional Safety Standards

EN 62061:2005	SIL 3
EN ISO 13849-1:2015	PL e / CAT 4
EN ISO 13849-2:2012	

3.5.2 EU Conformity Declaration

EU Declaration of Conformity

The product HGT 1053 conforms to the following European guidelines:

- → **2006/42/EG** Machine Guideline
- → **2014/30/EU** Electromagnetic Compatibility (EMC Guideline)
- → **2011/65/EU** “Restricted use of certain hazardous substances in electrical and electronic equipment” (RoHS Guideline)

The EU Conformity Declarations are provided on the SIGMATEK website. See Products/Downloads or use the search function and the keyword “EU Declaration of Conformity”.

3.6 Safety-Relevant Parameters

Input Module	Safety Parameters[1)]
HGT 1053	PFH_D = 1.1E-11 (1/h) $MTTF_D$ = 296 years DC = 99 % SFF = 99 %
Confirmation switch	B_{10D} = 100,000
Emergency stop switch	B_{10D} = 325,000
Key switch	B_{10D} = 10,000

1) Depending on the application, the probability of failure must be determined for the included electromechanical components based on the B_{10D} values listed here and included in the calculation for the entire system. The Safe CPU SCP 111 must also be calculated in.

4 Technical Data

4.1 Performance Data

Processor	EDGE3-Technology
Processor cores	4[1)]
Internal program and data memory (RAM)	2-GByte (DDR4)
Internal remnant data memory	128-kByte FRAM
Internal storage device	8-GByte eMMC[2)]
Optional memory expansion	microSD
Graphic	integrated in EDGE processor
Interfaces	1x Ethernet (10/100/1000) 1x USB 2.0 Type A 1x Safety Interface
Internal interface connections and devices	1x TFT color display 1x USB 2.0 Type A 1x USB (touch connection) 1x microSD card holder (SD 3.0)
Operating components	Confirmation switch (2 normally open contacts, 3-stage) Key switch (2 normally open contacts) Emergency stop switch (2 normally closed contacts)
Signal generator	no
Display Resolution	10.1“ TFT color display WXGA 800 x 1280 pixels
Operating field	Touch screen (multi-touch, projective capacitive)
Status LEDs	Multi-LED (red/green)
Real-time clock	yes (battery buffered)
Cooling	semi-passive (fan activated only when required)

1) Attention: When programming on multi-core CPUs (with LASAL), particular focus must be placed on thread security!

2) The internal storage device (eMMC) is only available from later operating system versions and is currently mapped via an 8 GByte microSD card. The microSD card is no longer part of the scope of delivery once this functionality is implemented in the operating system.

INFORMATION

The Safety interface must be used exclusively with the SCP 111! The status of the Safety-oriented inputs is sent to the SCP 111.

4.2 Electrical Requirements

Supply voltage	+24 V DC ±20 % (SELV/PELV) UL: Class 2 of LVLC	
Protection class	III	
Current consumption of (+24 V) power supply	typically 600 mA (with no external devices connected)	maximum 700 mA (with external devices connected)
Inrush current without current-limiting supply	maximum 9 A for < 110 µs	
Inrush current with 24 V/10 A fixed voltage supply	maximum 1.9 A for < 500 ms	

The specified supply voltage refers directly to the device connection. Take the generated voltage drop via the hybrid cable into consideration and if necessary, increase the required supply voltage.

INFORMATION

For USA and Canada:

The supply must be limited to:
a) max. 5 A at voltages from 0-20 V DC, or
b) 100 W at voltages from 20-60 V DC

The limiting component (e.g. transformer, power supply or fuse) must be certified by an NRTL (Nationally Recognized Testing Laboratory).

4.3 Display

Type	10.1” TFT color display
Resolution	WXGA 800 x 1280 pixels
Color depth	24-Bit RGB
LCD mode	normally black[1)]
LCD Polarizer	transmissive[2)]
Pixel size	0.1695 x 0.1695 mm
Active range	135.6 x 216.96 mm
Backlighting	LED
Contrast ratio	typically 800:1
Brightness	typically 300 cd/m²
Angle CR ≥ 10	from all sides 85°[3)]
Life span	By compliance with the ambient conditions, the brightness of the display sinks after 20,000 operating hours to 50 % of the original brightness.

Due to the manufacturing process, individual pixel errors cannot be excluded to 100 % and therefore do not constitute a reduction in quality.

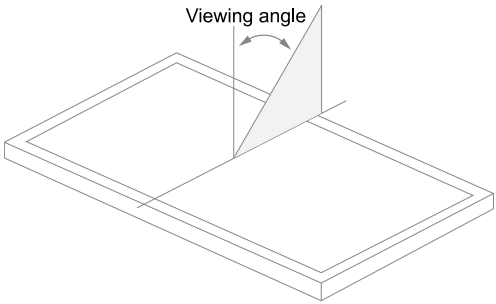

1) If there is no display data, the display remains black when the backlighting is on.

2) Display technology, with which display backlighting is used.

3) The viewing angle is measured from the normal to the display surface.

4.4 Control Unit

Operating field	Touch screen (multi-touch, projective capacitive)
Maximum number of fingers	10
The operation with thin gloves	yes
SIGMATEK Touch pen (passive)	yes
Handwriting recognition	no
Ball of the thumb recognition	no
Water spray recognition[1)]	yes
Water detection[2)]	no
Cleaning	see chapter 14.1 Cleaning and Disinfecting the Touch Screen

INFORMATION

The device must always be grounded or with cable-connected devices, the mass must be connected correctly to ensure stable function of the touch screen. The touch function may still have to be individually adapted to the respective environmental conditions.

1) Detects individual water droplets on the touch screen and remains operable.

2) Detects a large amount of water on the touch screen and deactivates it.

4.5 Minimum Distance between Operating Elements for Multi-touch Applications

To guarantee smooth operation with multi-touch applications, buttons and control elements that should be operated at the same time must have a realistic minimum clearance.

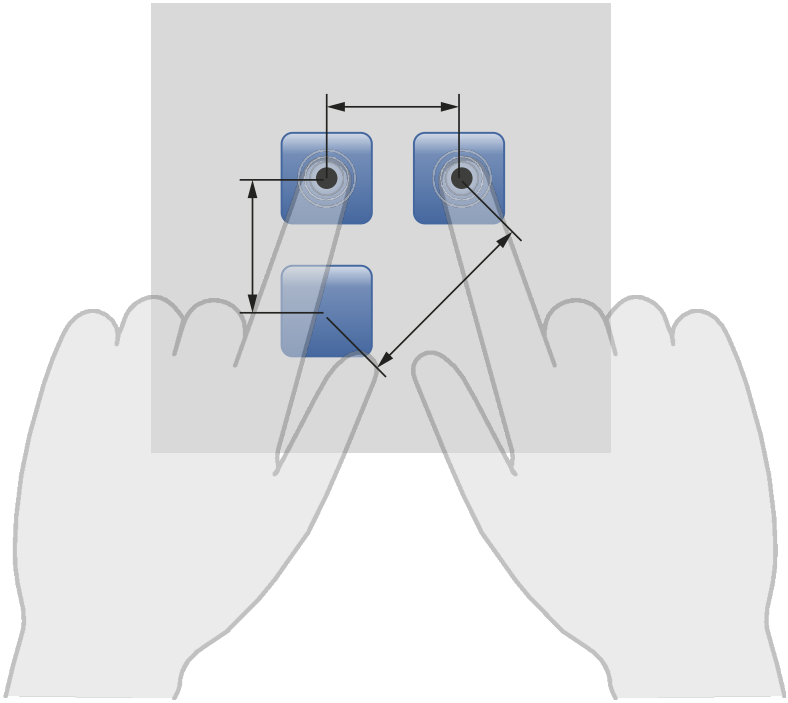

INFORMATION

The size of the buttons and operating elements directly affect the operability of the application. Small operating elements should therefore be avoided.

4.6 Input

Input	Multi-touch screen (PCAP)
Emergency stop switch	1
Confirmation switch	1 (3 switch positions with panic function)
Key switch	1 (2 switch positions)

4.7 Environmental Conditions

Storage temperature	-10 ... +70 °C	
Environmental temperature	0 ... +50 °C	
Humidity	10-95 %, non-condensing	
Installation altitude above sea level	0-2000 m without derating > 2000 m up to a maximum of 5000 m with derating of the maximum environmental temperature by 0.5 °C per 100 m	
Operating conditions	pollution degree 2	
Noise emissions at max. fan speed	≤ 35 dB	
EMC resistance	according to EN61000-6-2 (industrial area) (increased requirements according to EN 62061)	
EMC noise generation	according to EN 61000-6-3 (residential area) according to EN 61000-6-4 (industrial area)	
Vibration resistance	EN 60068-2-6	3.5 mm from 5-8,4 Hz 1 g from 8.4-150 Hz
Shock resistance	EN 60068-2-27	15 g (147.15 m/s^2)
Protection type	EN 60529 protection through housing	IP54 (only with all protective in place)
Free fall (with rough handling)	DIN EN 60068-2-31	1000 mm
Free fall (with packaging)	IEC 60068-2-32	1000 mm

4.8 Miscellaneous

Article number	01-245-1053
Operating system	Gecko
Default IP address	10.10.150.1
Approvals	CE, TÜV-Austria EG-type-examined

5 Interfaces

5.1 Connections Bottom

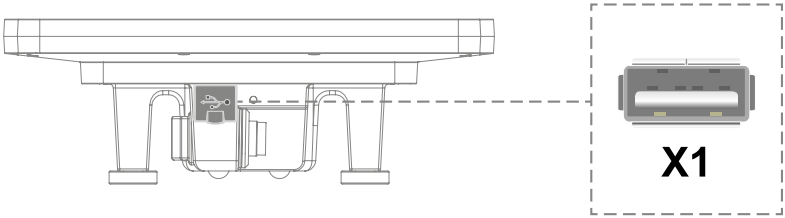

5.1.1 X1: USB Interface 2.0 Type A

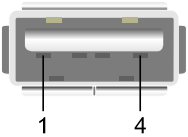

Pin	Function
1	+5 V, $I_{out,max}$ = 500 mA
2	D-
3	D+
4	GND

INFORMATION

It should be noted that many of the USB devices on the market do not comply with USB specifications; this can lead to device malfunctions. This may cause the device to malfunction. It is also possible that these devices will not be detected at the USB port or function correctly. It is therefore recommended that every USB stick or USB supply be tested before actual use.

5.2 Rear Connectors

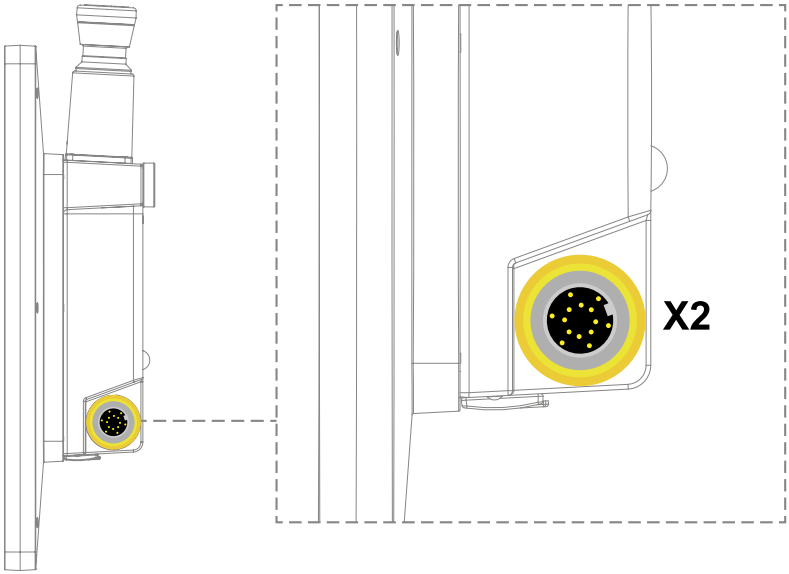

5.2.1 X2: M16 Cable Connector

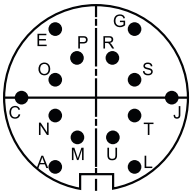

Pin	Wire color	Function	
L	yellow	Safety interface H	
J	green	Safety interface L	
G	black	Safety interface shield	
E	red	+24 V DC	
C	black	GND	
A	shield	ETH shield	
U	white	Gigabit Ethernet	DA+/TX+
T	red		DD+
S	blue		DD-
R	pink		DC-
P	grey		DC+
O	yellow		DB-/RX-
N	green		DB+/RX+
M	brown		DA-/TX-

INFORMATION

Appropriate connector cables are optionally available. See documentation for operating device connection cables.

5.3 Status Display LEDs

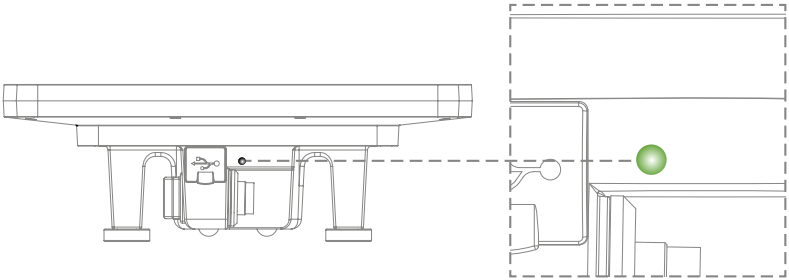

Multi-LED	Status
Lights green	- Supply voltage OK - During operating system start - Application running
Lights red	- Supply voltage NOT OK
Lights yellow	- Supply voltage OK - Operating system not started or still in Start mode
Blinks red	- Application error or reset

INFORMATION

Within the application, the multi-LED (green/red) can be controlled as desired.

5.4 Key Switch

The key switch is two-stage and evaluated via the SCP 111 connected to the HGT 1053.

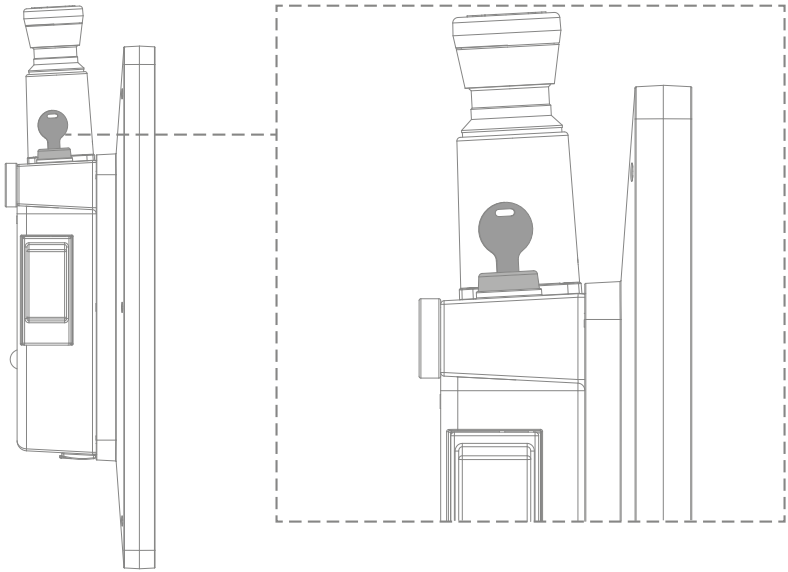

5.5 Confirmation Switch

The confirmation switch is three stage. If the switch is not pressed or pressed only partially, it is inactive. The switch is active when “simply” pressed (middle stage).

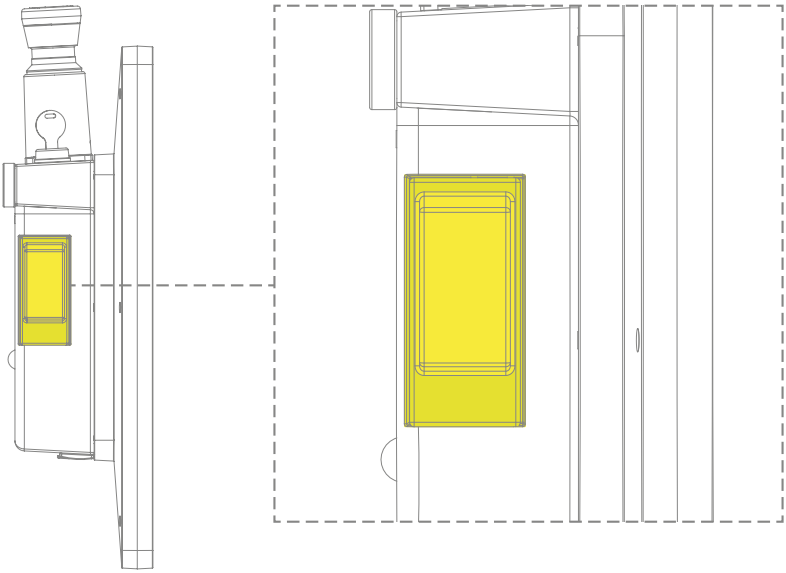

CAUTION

Activating the confirmation switch is a deliberate action. Do not press the confirmation switch for longer than required to confirm the affected operation.

The confirmation switch is part of the safety-related feature. Only the person activating the confirmation switch may work in the danger zone.

The confirmation switch can be operated with the hand used to hold the operating panel. The confirmation switch can be used as dead-man switch with a panic function.

5.6 Emergency Stop

The emergency stop has 2-channel construction.

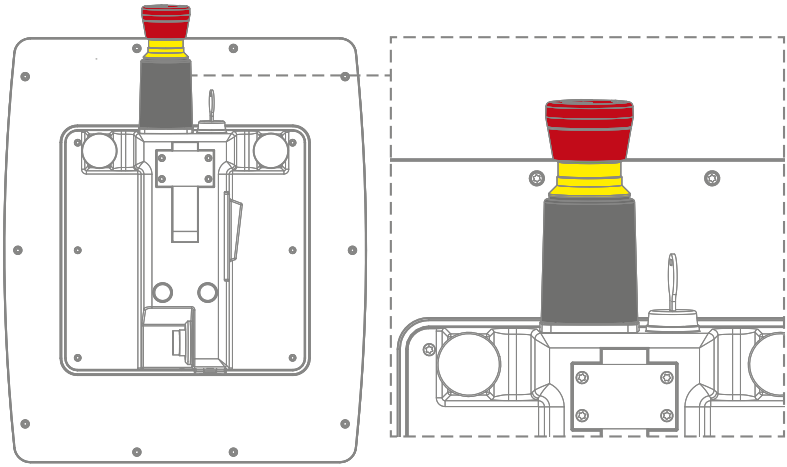

6 Mechanical Dimensions

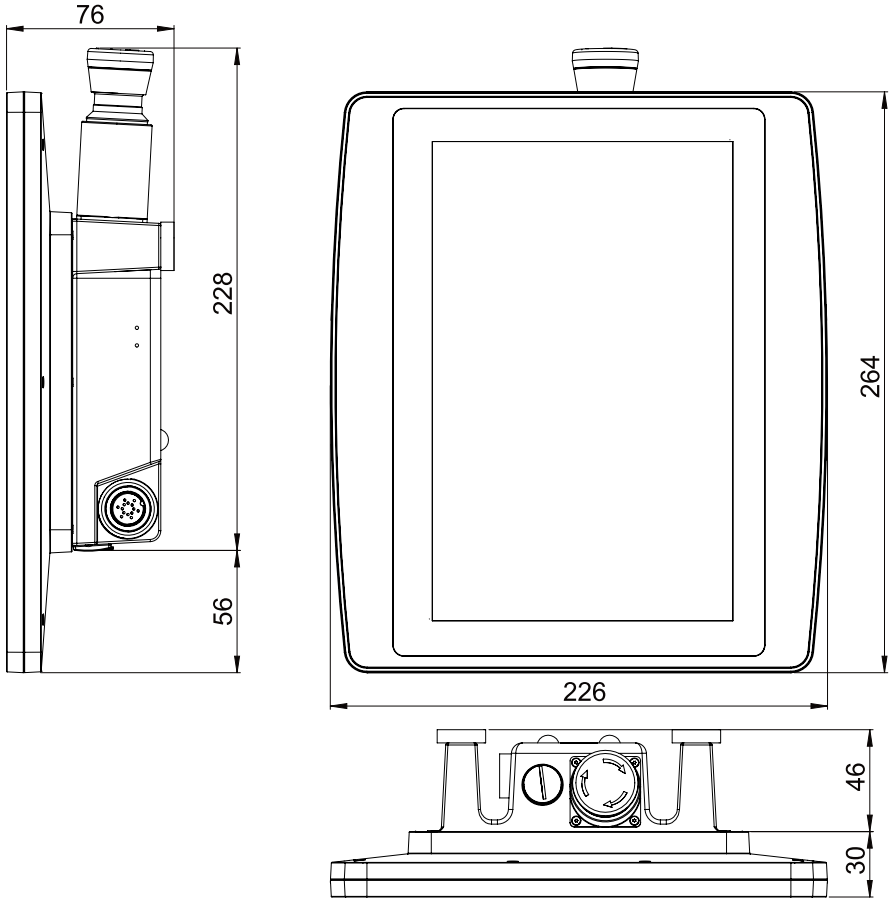

Dimensions	226 x 264 x 76 mm (W x H x D)
Material	Housing: PC/ASA Color: RAL7024 Front: glass 1.1 mm
Weight	1.25 kg

7 Assembly/Installation

7.1 Check Contents of Delivery

Ensure that the contents of the delivery are complete and intact. See chapter 1.3 Contents of Delivery.

INFORMATION

On receipt and before initial use, check the device for damage. If the device is damaged, contact our customer service and do not install the device in your system.

Damaged components can disrupt or damage the system.

7.2 Cooling

The high performance processor of the HGT 1053 is cooled passively.

The CPU is passively cooled until a critical core temperature is reached (mostly caused by a high CPU/GPU load and simultaneously, high ambient temperatures) The fan remains active until the CPU is cooled to a temperature that allows passive cooling. The device can therefore reliably operate at full capacity without performance loss at the maximum operating temperature and extend the lifespan of the the fan during idle times.

A fan is with a very high life expectancy is installed.

Life expectancy (continuous operation, fan)	
MTTF (MTBF) at 40 °C	550 000 h = circa 62 years
L10 at 40 °C	70 000 h = circa 8 years

The speed and status of the fan can be read via the device software (hardware class). A fan monitor can be thereby implemented, which warns the user of a defect.

7.3 Wall Mount

Using the corresponding wall mount, the panel can be attached to the provided holder (A1) on the back (see dimensions for counter piece).

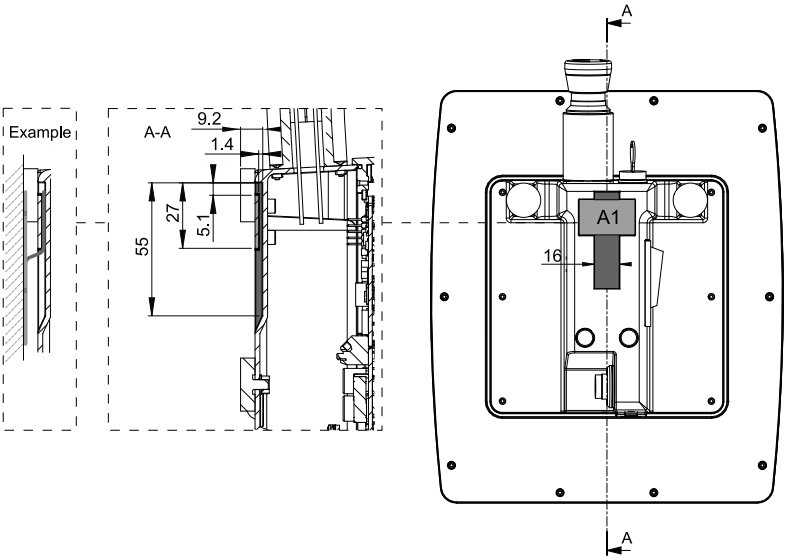

Symbol Image 10”

8 Wiring

8.1 Recommended Shielding

For applications in which the bus is operated outside the control cabinet, the correct shielding is required. This is especially important, if due to physical requirements, the bus cables must be placed next to sources of strong electromagnetic noise. It is recommended that wiring the connector cable in parallel with power cables be avoided whenever possible.

8.1.1 Connection from the Control Cabinet to the HGT 1053

It is recommended that the shielding be mounted at the entry point of the control cabinet housing. Noise can then be deflected from the electronic components before reaching the module.

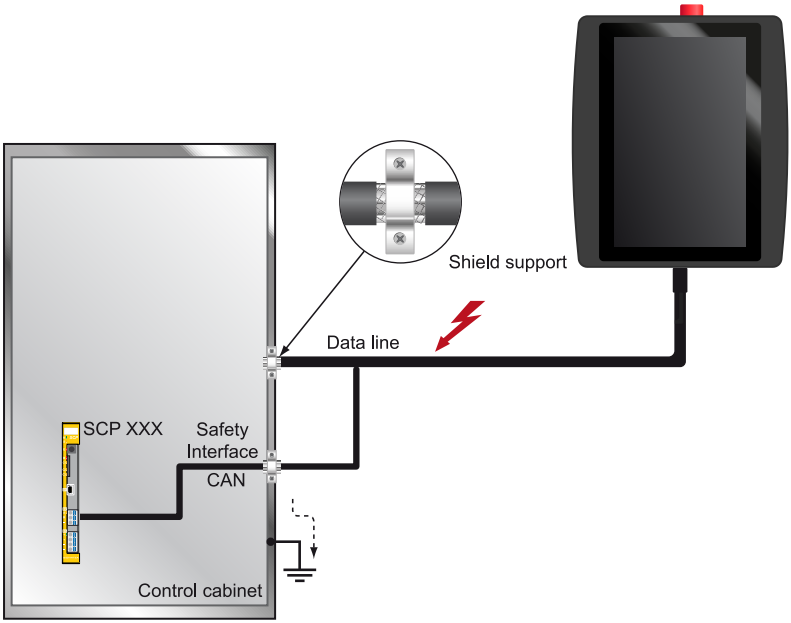

Schematic Representation

8.2 ESD Protection

CAUTION

Typically, USB devices (keyboard, mouse etc.) are equipped with non-shielded cables. These devices are disrupted by ESD and in some instances, no longer function.

Généralement, les périphériques USB (clavier, souris etc) ne sont pas équipés de câbles blindés. Ces dispositifs sont perturbés par des décharges électrostatiques et, dans certains cas, ne fonctionnent plus.

Before any device is connected to, or disconnected from the product, the potential should be equalized (by touching the control cabinet or ground terminal). Electrostatic loads (through clothing and shoes etc.) can thereby be dissipated.

Avant de connecter ou de déconnecter un appareil à le produit, le potentiel doit être égalisé (en touchant l'armoire électrique ou la borne de terre). Les charges électrostatiques (à travers les vêtements et les chaussures etc.) peuvent ainsi être éliminées.

8.3 USB Interface

The product has a USB interface. This interface can be used to connect various USB devices (keyboard, mouse, storage media, hubs, etc.). Several USB devices can be connected using a hub, which are then fully functional.

9 Process Diagram

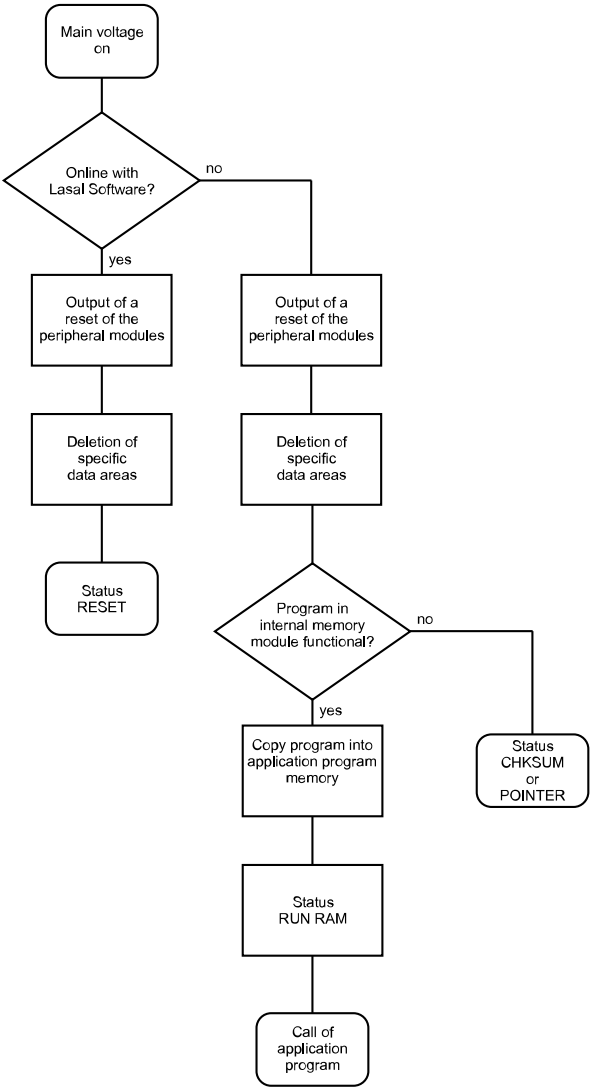

10 Status and Error Messages

Status and error messages are shown in the status test of the LASAL CLASS software. POINTER or CHKSUM messages can also be shown on the screen.

Number	Message	Definition	Cause/Solution
00	`RUN RAM`	The user program is currently running in RAM. The display is not affected.	Info
01	`RUN ROM`	The user program stored in the program memory module was loaded into the RAM and is currently running. The display is not affected.	Info
02	`RUNTIME`	The total time for all cyclic objects exceeds the maximum time; the time can be configured using 2 system variables: ■ Runtime: Remaining time ■ SWRuntime: Preset value for runtime counter	Optimize the application's cyclic task. Use higher capacity CPU. Configure preset value
03	`POINTER`	Incorrect program pointers were detected before running the user program	Possible Causes: ■ The program memory module is missing, not programmed or defective. ■ The program in the user program memory (RAM) is not executable. ■ The buffer battery has failed. ■ The user program has overwritten a software error. Solution: ■ Reprogram the memory module, if the error reoccurs exchange the module. ■ Exchange the buffering battery ■ Correct programming error

Number	Message	Definition	Cause/Solution
04	**CHKSUM**	An invalid checksum was detected before running the user program.	Cause/Solution: s. POINTER
05	**WATCHDOG**	The program was interrupted via the watchdog logic.	Possible Causes: ■ User program interrupts blocked over a longer period of time (STI command forgotten). ■ Programming error in a hardware interrupt. ■ INB, OUTB, INW, OUTW instructions used incorrectly. ■ The processor is defective. Solution: ■ Correct programming error. ■ Exchange CPU
06	**GENERAL ERROR**	General error An error has occurred while stopping the application via the online interface.	This error occurs only during the development of the operating system.
07	**PROM DEFECT**	An error has occurred while programming the memory module.	Causes: ■ The program memory module is defective. ■ The user program is too large. ■ The program memory module is missing. Solution: ■ Exchange the program memory module
08	**RESET**	The CPU has received the reset signal and is waiting for further instructions. The user program is not processed.	Info

Number	Message	Definition	Cause/Solution
09	**WD DEFECT**	The hardware monitoring circuit (watchdog logic) is defective. After power-up, the CPU checks the watchdog logic function. If an error occurs during this test, the CPU deliberately enters an infinite loop from which no further instructions are accepted.	Solution: ■ Exchange CPU
10	**STOP**	The program was stopped by the programming system.	
11	**PROG BUSY**	Reserved	
12	**PROGRAM LENGTH**	Reserved	
13	**PROG END**	A memory module was successfully programmed.	Info
14	**PROG MEMO**	The CPU is currently programming the memory module.	Info
15	**STOP BRKPT**	The CPU was stopped by a breakpoint in the program.	Info
16	**CPU STOP**	The CPU was stopped by the programming software.	Info
17	**INT ERROR**	The CPU has triggered a false interrupt and stopped the user program or has encountered an unknown instruction while running the program.	Causes: ■ A nonexistent operating system was used. ■ Stack error (uneven number of PUSH and POP instructions). ■ The user program was interrupted by a software error. Solution: ■ Correct programming error.

Number	Message	Definition	Cause/Solution
18	`SINGLE STEP`	The CPU is in single step mode and is waiting for further instructions.	Info
19	`READY:`	A module or project has been sent to the CPU and it is ready to run the program.	Info
20	`LOAD`	The program is stopped and the CPU is currently receiving a new module or project.	Info
21	`INVALID MODULE`	The CPU has received a module that does not belong to the project.	Solution: ■ Recompile and download the entire project
22	`MEMORY FULL`	The operating system memory (heap) is too small. No memory could be reserved while calling an internal function or an interface function is called from the application.	Causes: ■ Memory is only allocated but not released. Solution: ■ Clear memory
23	`NOT LINKED`	When starting the CPU, a missing module or a module that does not belong to the project was detected.	Solution: ■ Recompile and download the entire project
24	`DIV BY 0`	A division error has occurred.	Possible Causes: ■ Division by 0. ■ The result of a division does not fit in the result register. Solution: ■ Correct programming error.
25	`DIV BY 0`	A division error has occurred.	Possible Causes: ■ Division by 0. ■ The result of a division does not fit in the result register. Solution: Correct programming error.

Number	Message	Definition	Cause/Solution
25	DIAS ERROR	While accessing a DIAS module, an error has occurred.	Hardware problem
26	WAIT	The CPU is busy.	Info
27	OP PROG	The operating system is currently being reprogrammed.	Info
28	OP INSTALLED	The operating system has been reinstalled.	Info
29	OS TOO LONG	The operating system cannot be loaded; too little memory.	Restart, report error to SIGMATEK.
30	NO OPERATING SYSTEM	Boot loader message, no operating system found in RAM.	Restart, report error to SIGMATEK.
31	SEARCH FOR OS	The boot loader is searching for the operating system in RAM.	Restart, report error to SIGMATEK.
32	NO DEVICE	Reserved	
33	UNUSED CODE	Reserved	
34	MEM ERROR	The operating system loaded does not match the hardware configuration.	Solution: ■ Use the correct operating system version
35	MAX IO	Reserved	
36	MODULE LOAD ERROR	The LASAL Module or project cannot be loaded.	Solution: ■ Recompile and download the entire project
37	BOOTIMAGE FAILURE	A general error has occurred while loading the operating system.	Contact SIGMATEK
38	APPLMEM ERROR	An error has occurred in the application memory (user heap).	Solution: ■ Correct allocated memory access error

Number	Message	Definition	Cause/Solution
39	OFFLINE	This error does not occur in the control.	This error code is used in the programming system to show that there is no connection to the control.
40	APPL LOAD	Reserved	
41	APPL SAVE	Reserved	
44	VARAN MANAGER ERROR	An error number was entered in the VARAN manager and stopped the program.	Solution: ■ Read LogFile
45	VARAN ERROR	A required VARAN client was disconnected or a communication error has occurred.	Solution: ■ Read LogFile error tree
46	APPL-LOAD-ERROR	An error has occurred while loading the application.	Cause: ■ Application was deleted. Solution: ■ Reload the application into the control.
47	APPL-SAVE-ERROR	An error has occurred while attempting to save the application.	
50	ACCESS-EXCEPTION-ERROR	Read or write access of a restricted memory area. (I.e. writing to the NULL pointer).	Solution: ■ Correct application errors
51	BOUND EXCEEDED	An exception error has occurred while accessing arrays. The memory area was overwritten by accessing an invalid element.	Solution: ■ Correct application errors
52	PRIVILEDGED INSTRUCTION	An unauthorized instruction for the current CPU level was given. For example, setting the segment register.	Cause: ■ The application has overwritten the application program code. Solution: ■ Correct application errors

Number	Message	Definition	Cause/Solution
53	FLOATING POINT ERROR	An error has occurred during a floating-point operation.	
60	DIAS-RISC-ERROR	Error from the Intelligent DIAS Master.	Restart, report error to SIGMATEK.
64	INTERNAL ERROR	An internal error has occurred, all applications are stopped.	Restart, report error to SIGMATEK.
65	FILE ERROR	An error has occurred during a file operation.	
66	DEBUG ASSERTION FAILED	Internal error	Restart, report error to SIGMATEK.
67	REALTIME RUNTIME	The total duration of all real-time objects exceeds the maximum time; the time cannot be configured. 2 ms for 386 CPUs, 1 ms for all other CPUs	Solution: ■ Optimize the application's real-time task (RtWork). ■ Reduce the clock time for the real-time task of all objects. ■ Correct application errors ■ CPU is overloaded in real-time => use a higher capacity CPU.
68	BACKGROUND RUNTIME	The total time for all background objects exceeds the maximum time; the time can be configured using 2 system variables: - BTRuntime: - SWBTRuntime: pre-selected value for the runtime counter	Solution: ■ Optimize the application's background task (background) ■ Use higher capacity CPU ■ Set SWBTRuntime correctly
70	C-DIAS ERROR	A connection error with a C-DIAS module has occurred.	Cause: ■ The cause of the error is documented in the log file Solution: ■ This depends on the cause

Number	Message	Definition	Cause/Solution
72	S-DIAS ERROR	A connection error with an S-DIAS module has occurred.	Possible Causes: ■ Real network does not match the project, S-DIAS client is defective Solution: ■ Analyze log file
75	SRAM ERROR	An error occurred while initializing, reading or writing SRAM data.	Possible Causes: ■ SRAM configured incorrectly ■ Battery for powering the internal program memory is empty Solution: ■ Analyze log file (Event00.log, Event19.log) ■ Check configuration ■ Exchange battery for powering the internal program memory
95	USER DEFINED 0	User-definable code.	
96	USER DEFINED 1	User-definable code.	
97	USER DEFINED 2	User-definable code.	
98	USER DEFINED 3	User-definable code.	
99	USER DEFINED 4	User-definable code.	
100	C_INIT	Initialization start; the configuration is run.	
101	C_RUNRAM	The LASAL project was successfully started from RAM.	
102	C_RUNROM	The LASAL project was successfully started from ROM.	
103	C_RUNTIME		
104	C_READY	The CPU is ready for operation.	
105	C_OK	The CPU is ready for operation.	

Number	Message	Definition	Cause/Solution
106	C_UNKNOWN_CID	An unknown object from a stand-alone or embedded object, or an unknown base class was detected.	
107	C_UNKNOWN_CONSTR	The operating system class cannot be created; the operating system is probably wrong.	
108	C_UNKNOWN_OBJECT	Indicates an unknown object in an interpreter program; more the one DCC080 object.	
109	C_UNKNOWN_CHNL	The hardware module number is greater than 60.	
110	C_WRONG_CONNECT	No connection to the required channels.	
111	C_WRONG_ATTR	Wrong server attributes.	
112	C_SYNTAX_ERROR	Non-specific error. Recompile and download all project sections.	
113	C_NO_FILE_OPEN	An attempt was made to open an unknown table.	
114	C_OUTOF_NEAR	Memory allocation failed	
115	C_OUT OF_FAR	Memory allocation failed	
116	C_INCOMAPTIBLE	An object with the same name already exists but has a different class.	
117	C_COMPATIBLE	An object with the same name and class exists but must be updated.	
224	LINKING	The application is currently linking.	
225	LINKING ERROR	An error has occurred while linking.	

Number	Message	Definition	Cause/Solution
226	LINKING DONE	Linking is complete.	
230	OP BURN	The operating system is currently being burned into the Flash memory.	
231	OP BURN FAIL	An error has occurred while burning the operating system.	
232	OP INSTALL	The operating system is currently being installed.	
240	USV-WAIT	The power supply was disconnected; the UPS is active. The system is shutdown.	
241	REBOOT	The operating system is restarted.	
242	LSL SAVE		
243	LSL LOAD		
252	CONTINUE		
253	PRERUN	The application is started.	
254	PRERESET	The application is ended.	
255	CONNECTION BREAK		

11 Operation/Start-up

11.1 Note

WARNING

The operating panel can be mounted onto magnetic components, for example, directly on the machine.
Caution must be taken to ensure that no magnetically sensitive objects are located in the immediate vicinity of the HGT 1053 (e.g. credit / magnetic stripe cards).

Le panneau de commande peut être monté sur des composants magnétiques, par exemple directement sur la machine.
Veiller à ce qu'aucun objet magnétiquement sensible ne se trouve à proximité immédiate de HGT 1053 (p. ex. cartes de crédit / cartes à bande magnétique).

DANGER

This device is equipped strong magnets, which can pose a danger to people with implants such as pacemakers!

Cet appareil est équipé d'aimants puissants, ce qui peut représenter un danger pour les personnes porteuses d'implants tels que les stimulateurs cardiaques!

11.2 Operation

11.2.1 General

The Safety functions (key switch, confirmation switch, emergency stop) are not functional at the time of delivery and must be defined by the applications engineer via programming. In order to use the Safety functions, a safety-related control SCP 111 is required. See chapter 20 Application Information.

The HGT 1053 is operated via the touch screen.

INFORMATION

To avoid damage to the touch screen, it can only be operated using the fingers or an appropriate stylus. Suitable gloves are also permitted for the touch technology, as long as they do not damage the device (e.g. via chips, pointed or similar objects).

CAUTION

Do not lay the operating panel on its touch screen. Also avoid laying anything on top of the touch screen.
This can cause operating errors, undesired triggering of functions or damage to the device.

Ne posez pas le panneau de commande sur son écran tactile. Évitez également de poser quoi que ce soit sur l'écran tactile.Cela peut entraîner des erreurs de fonctionnement, des déclenchements intempestifs de fonctions ou des dommages sur l'appareil

Do not place the panel on loose or unstable surfaces. It could fall onto the floor and be subsequently damaged.

Ne placez pas le panneau sur des surfaces lâches ou instables. Il pourrait tomber sur le sol et être endommagé par la suite.

The operating panel is constructed to that it can be operated by right and left handers equally.

CAUTION

Typically, USB devices (keyboard, mouse etc.) are equipped with non-shielded cables. These devices are disrupted by ESD and in some instances, no longer function.

Généralement, les périphériques USB (clavier, souris etc) ne sont pas équipés de câbles blindés. Ces dispositifs sont perturbés par des décharges électrostatiques et, dans certains cas, ne fonctionnent plus.

Before any device is connected to, or disconnected from the product, the potential should be equalized (by touching the control cabinet or ground terminal). Electrostatic loads (through clothing and shoes etc.) can thereby be dissipated.

Avant de connecter ou de déconnecter un appareil à le produit, le potentiel doit être égalisé (en touchant l'armoire électrique ou la borne de terre). Les charges électrostatiques (à travers les vêtements et les chaussures etc.) peuvent ainsi être éliminées.

11.2.2 Evaluating Operating Elements

The operating panel sends all statuses to the control, through which further actions can be set. Display (display, LEDs...) are initiated by the control.

The HGT 1053 sends the following operating element statuses to the safety-related control SCP 111, which can evaluate and process the information.

- Key switch
- Emergency stop
- Confirmation switch

12 Transport/Storage

INFORMATION

This device contains sensitive electronics. During transport and storage, high mechanical stress must therefore be avoided.

For storage and transport, the same values for humidity and vibration as for operation must be maintained!

Temperature and humidity fluctuations may occur during transport. Ensure that no moisture condenses in or on the device, by allowing the device to acclimate to the room temperature while turned off.

13 Storage

INFORMATION

When not in use, store the device according to the storage conditions. See chapter 12 Transport/Storage.

During storage, ensure that all protective covers (if available) are placed correctly, so that no contamination, foreign bodies or fluids enter the device.

The existing battery in the device must be replaced after approx. 20 years. If the device is to be stored longer, the battery must be removed to prevent leakage.

14 Maintenance

INFORMATION

During maintenance as well as servicing, observe the safety instructions from chapter 2 Basic Safety Guidelines.

Lors de l'entretien et de la maintenance, respectez les consignes de sécurité du chapitre 2 Basic Safety Guidelines.

14.1 Cleaning and Disinfecting the Touch Screen

CAUTION

Before cleaning and disinfecting the touch screen, it must first be deactivated; either by turning off the terminal or by disabling the touch screen via the application to avoid unintentionally activating functions or commands!

Avant de nettoyer et de désinfecter l'écran tactile, il faut d'abord le désactiver; soit en éteignant le terminal, soit en désactivant l'écran tactile via l'application pour éviter d'activer involontairement des fonctions ou des commandes!

The touch screen can only be cleaned with a soft, damp cloth. To dampen the cloth, a mild cleaning solution such as antistatic foam cleaner is recommended. To avoid fluids/cleaning solutions from getting into the housing, the device must not be sprayed directly. To clean, no erosive cleaning solutions, chemicals, abrasive cleansers or hard objects that can scratch or damage the touch screen may be used. The use of steam jets or compressed air is prohibited.

For disinfection, surface disinfectants on alcohol basis, which do not contain re-fattening agents, can be used. The disinfectant used must not leave any residues on the touch screen to ensure proper functioning of the touch screen.

WARNING

If the device is contaminated with toxic or erosive chemicals, it must be carefully cleaned as quickly as possible to prevent personal injury and machine damage!

Si l'appareil est contaminé par des produits chimiques toxiques ou érosifs, il doit être soigneusement nettoyé le plus rapidement possible afin d'éviter des dommages corporels et matériels!

INFORMATION

To ensure the optimal function of the device, the touch screen should be cleaned at regular intervals!

14.2 Service

This product was constructed for low-maintenance operation.

14.2.1 Calibrating the Touch Screen

The touch screen is calibrated at the factory. You should therefore only recalibrate the touch screen when press-point changes are noticed.

This can be achieved via the following command (depending on the operating system) or the application, if the application engineer has provided the option.

```
calib
```

14.3 Repair

INFORMATION

When sent for repair, the device should be transported in the original packaging if possible. Otherwise, packaging should be selected that sufficiently protects the product from external mechanical influences. Such as cardboard filled with air cushioning.

CAUTION

Danger of injury from damaged components!

→ Damage to the device, especially the touch screen, poses a cut hazard. In such a case, use safety gloves.

Risque de blessure par des composants endommagés !

→ Les dommages à l'appareil, en particulier à l'écran tactile, présentent un risque de coupure. Dans ce cas, utilisez des gants de sécurité.

In the event of a defect/repair, send the device with a detailed error description to the address listed at the beginning of this document.

15 Buffer Battery

A Lithium battery is installed at the manufacturer.

The battery has enough capacity to preserve data in the absence of a supply voltage for up to circa 20 years.

	COMPANY	DATA
Lithium battery	RENATA	3.0 V/235 mAh

INFORMATION

Battery order number: 01-690-055

Use type CR2032 batteries from RENATA only.

Disconnect the device from the supply before changing the battery.

WARNING

Danger of fire and explosion!

→ Slight to serious injuries can occur from incorrect use of the battery.

→ Do not recharge, disassemble or throw batteries into fire!

Danger d'incendie et d'explosion !

→ Des blessures légères à graves peuvent résulter d'une mauvaise utilisation de la batterie.

→ Ne pas recharger, démonter ou jeter les piles dans le feu!

15.1 Data Retention Battery Change

The exchangeable buffer battery ensures that the following data is preserved in the absence of a supply voltage:

- Time

If the battery is empty, the following settings are reset or data is deleted:

- Time (reset to default value)

15.2 Exchanging the Battery

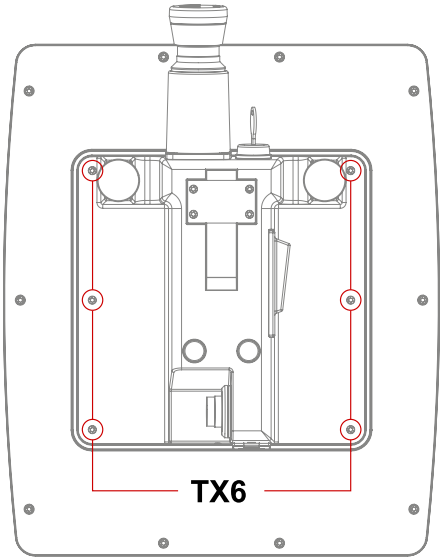

1. Turn off the device supply.
2. Create ESD-compliant conditions.
3. Remove the locking screws with a Torx screwdriver.

4. Carefully lift the cover to avoid damaging the connecting cable between the housing sections and access the battery holder.

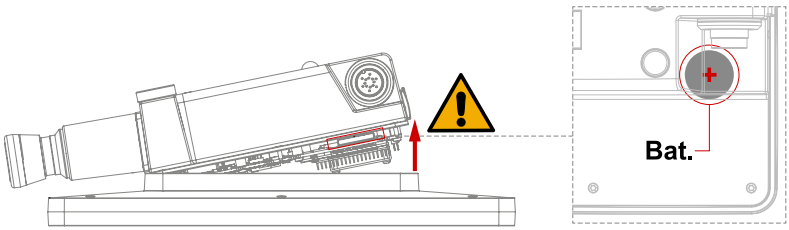

5. Remove the battery from the holder.
6. Install the new battery with the correct polarity (+ pole facing up, away from the circuit board).
7. Close the cover (caution, connecting cable) and tighten the locking screws (0.2 Nm).

16 microSD Card

The 10.1" Handheld Operating Panel has a microSD card slot inside the device.

16.1 Exchanging the microSD Card

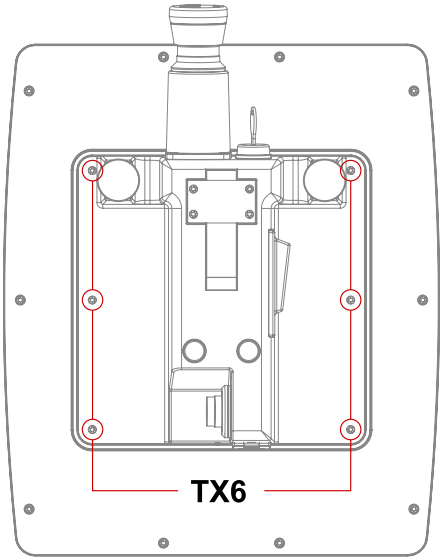

1. Turn off the device supply.
2. Create ESD-compliant conditions.
3. Remove the locking screws with a Torx screwdriver.

4. Carefully lift the cover to avoid damaging the connecting cable between the housing sections and access the microSD holder. The card holder is located below the fan.

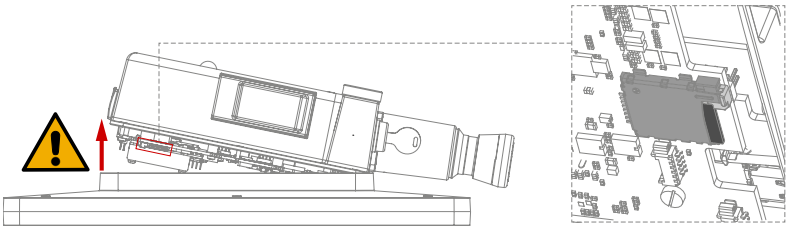

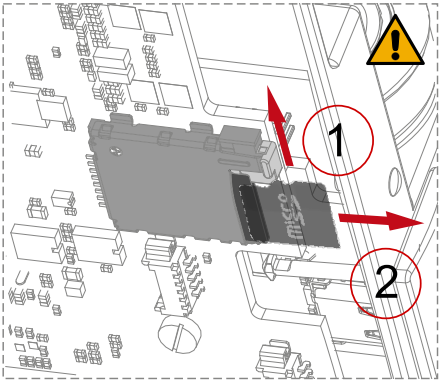

5. Carefully press the lock on the side (caution: card springs out due to mechanism).
6. Remove card.

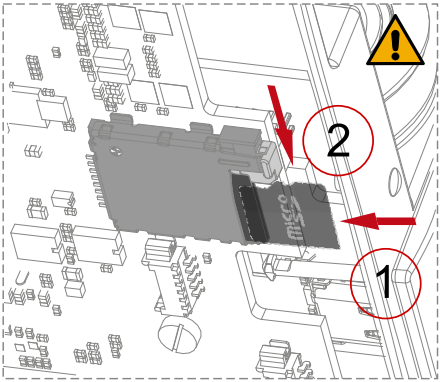

7. Insert the new microSD card.
8. Ensure that the latch is completely engaged.

9. Close the cover (caution, connecting cable) and tighten the locking screws (0.2 Nm).

17 Display „Burn-In“ Effect

The “Burn-In” effect describes a pattern burned into the display after displaying the same contents over a longer period of time (e.g. a single screen).

This effect is also described mostly as “image sticking”, “memory effect/sticking” or “ghost image”.

Here, a distinction is made between a temporary and permanent effect, while the temporary effect is eliminated by switching off the screen for a longer period of time or by displaying dynamic content, serious cases of burn-in can lead to permanent damage to the display.

This effect can have the following causes:

- Operation without a screen saver
- The same contents displayed over a longer time period (e.g. a single screen)
- Operation at high environmental temperatures
- Operation above specifications

The effect can be avoided/reduced by the following actions:

- Using a screen saver
- Deactivating the display when not in use (e.g. screen display black)
- Continuously changing screen content (e.g. video)

INFORMATION

Deactivating the display backlighting only does not prevent Burn-In!

17.1 Screen Saver

The device has an integrated screen saver, which is activated by default and turns off the screen after 60 minutes of inactivity. The screen can be reactivated with an input via the touch screen or a USB operating device. The wait time for the screen saver can be adjusted in the application via the HW class. This change is only active as long as the device is running the application, in Reset mode, the 60-minute default setting is restored.

18 Disposal

INFORMATION

Should you need to dispose of the device,the national regulations for disposal must be followed.

The device appliance must not be disposed of as household waste.

19 Accessories

19.1 Touch Pen

Description	Order Number
Touch pen with holder V3	01-690-059-3

19.2 Edge Protection

Description	Order Number
Edge protector 10“	12-246-1033-Z1

19.3 Battery

Description	Order Number
Lithium battery RENATA	01-690-055

20 Application Information

20.1 Configuring Safety Components

20.1.1 Minimum System Requirements

Component	Version
SAFETYDesigner	≥ 01.01.056 (Build: 2058)
SCP 111 firmware version	≥ 00.1049.448

INFORMATION

The actual time-out configured in the SCP 111 must be included in your risk assessment!

20.1.2 Adding the HGT 1053 to a SAFETYDesigner Project

To use the HGT 1053 in a Safety project, it must be integrated as follows:

1. Create a new project or open an existing one.
2. Add an “SCP 111” to the “hardware tree” if not already available.
3. Right-click on **„0-SAFETY_INTERFACE“**, then via Add-Device, add the **„HBG (HBG-CAN)“**.

20.1.3 Key Switch

In the SAFETYDesigner **Safe_Input5** and **Safe_Input6** are used fort he two-channel application of the key switch.

20.1.4 Confirmation Switch

In the SAFETYDesigner **Safe_Input1** and **Safe_Input2** are used for the two-channel application of the confirmation switch.

20.1.5 Emergency Stop

In the SAFETYDesigner **Safe_Input3** and **Safe_Input4** are used for the two-channel application of the emergency stop switch.

DANGER

Unlocking the emergency stop switch cannot trigger an automatic restart of the machine.

Le déverrouillage de l'interrupteur d'arrêt d'urgence ne peut pas déclencher un redémarrage automatique de la machine.

After the application unlocks the emergency stop switch, the operator must be prompted to run a defined activation process.

Après que l'application ait déverrouillé l'interrupteur d'arrêt d'urgence, l'opé-rateur doit être invité à exécuter un processus d'activation défini.

20.2 Storage Media

The operating system and customer application are stored on the internal storage device.

INFORMATION

At least 1 Gbyte of the total memory must be reserved for the update process (packages).

To ensure longevity of the memory, writing cyclic data to the internal storage medium should be avoided (lifespan drastically reduced). For cyclic writing, an external storage medium (e.g. microSD card or USB stick, depending on the respective device) from SIGMATEK must be used.

Errors resulting from the use of storage media from other manufacturers are excluded from support.

20.3 Updating the Operating System

Operating system versions of 09.07.009-387 or below cannot be updated online. For an update, the memory card must be removed from the device and the image loaded via PLC Diag - Make Bootdisk.

INFORMATION

With this update process, all existing data on the microSD card are overwritten! In is strongly recommended to backup import data before the update process!

20.4 HW Facts

INFORMATION

The Safety functions must be used with the SCP 111 exclusively! The status of the safety-related inputs (confirmation switch, key switch, emergency stop switch) is sent to the SCP 111, which decodes these functions and makes them available for further use.

The key switch must be tested at least once per year. For the emergency stop and confirmation switches, the operator must be prompted every 30 days to run a test!

Changes Chart

Change date	Affected page(s)	Chapter	Note
02.03.2021	20	4.3 Display	Data for portrait format rotated
	21	4.4 Control Unit	Chapter added
	22	4.5 Minimum Distance between Operating Elements for Multi-touch Applications	Chapter added
	31	6 Mechanical Dimensions	Dimensions expanded
	65	20.2 Storage Media	Text expanded: lifespan drastically reduced.
04.03.2021	17	3.6 Safety-Relevant Parameters	PFHD changed to 1.1
24.03.2021	18	4.1 Performance Data	Cache deleted USB added (internal interfaces)
29.04.2021	18	4.1 Performance Data	Footnote internal storage device
	21	4.4 Control Unit	Chapter extended
	65	20.2 Storage Media	HW version deleted
14.05.2021	24	4.8 Miscellaneous	Default IP address added
01.02.2022	20	4.3 Display	Life span display (15,000 to 20,000)