Safety System Handbook

Safety

Operating Manual

Date of creation: 20.05.2010 | Version date: 03.02.2026 | Article number: 08-100-131-E

Publisher: SIGMATEK GmbH & Co KG
A-5112 Lamprechtshausen
Tel.: +43/6274/4321
Fax: +43/6274/4321-18
Email: office@sigmatek.at
WWW.SIGMATEK-AUTOMATION.COM

Copyright © 2010
SIGMATEK GmbH & Co KG

Translation from German

All rights reserved. No part of this work may be reproduced, edited using an electronic system, duplicated or distributed in any form (print, photocopy, microfilm or in any other process) without the express permission.

We reserve the right to make changes in the content without notice. The SIGMATEK GmbH & Co KG is not responsible for technical or printing errors in the handbook and assumes no responsibility for damages that occur through use of this handbook.

Safety System Handbook

Contents

1 Introduction 12

1.1 General Instructions 12

1.1.1 Abbreviations 12

1.1.2 Symbols Used 13

1.1.3 General Safety Guidelines 14

1.1.4 Designated Use 16

1.1.5 Residual Risks 17

1.1.6 Special Safety Guidelines 18

1.2 Safety of the Machine or Equipment 19

1.3 Guidelines and Norms 19

1.4 EU Conformity Declaration 19

1.5 Service Life, Operating Time and Switching Cycle Times 20

1.6 Using Modules of Revision 1, Revision 2 and Revision 3 21

1.7 Documentation 22

1.8 System Requirements 24

2 Introduction to the C-DIAS and S-DIAS Safety System 26

2.1 C-DIAS Safety System Structure 26

2.2 S-DIAS Safety System Structure 28

2.3 Topology of the Safety System 29

2.3.1 General Topology 29

2.3.2 Safety Modules 33

2.3.3 Safe Status 33

2.3.4 Hand Control Unit 34

2.3.5 Safety Interface ... 35

2.4 Communication in the Safety System ... 37

2.5 System Characteristics ... 37

2.5.1 Configuration Characteristics ... 37

2.5.2 System Configuration ... 38

2.5.3 System Changes ... 39

2.5.4 Reaction and Turn-off Time ... 39

2.5.5 Safety Module LEDs ... 40

2.5.6 Diagnosis ... 41

2.6 Operating Modes ... 42

2.6.1 Post – Power On Self-Test ... 43

2.6.2 IDLE ... 45

2.6.3 ChkCfg – Check Configuration ... 46

2.6.4 OpTemp – Time limited Operational Mode ... 47

2.6.5 Op – Operational ... 49

2.6.6 Service – Service Mode ... 50

2.6.7 Error – Error Mode ... 52

2.6.8 SAI 041 – Auto Quit ... 53

3 Installation and Mounting ... 56

3.1 Mounting a Safety Module ... 56

3.2 Wiring ... 56

3.2.1 Wiring Examples and Examples of Creating Configurations ... 57

4 Initial Start-up and Configuration ... 78

4.1 Creating the Standard Control Project ... 78

4.2 Creating the Safe Application with the SAFETYDesigner 78

4.2.1 Creating the Configuration 78

4.2.2 System Configuration 79

4.3 Configuration using the SD Card 81

4.3.1 Writing to the SD Card 81

4.3.2 Configuring a Safety CPU with the SD Card 82

4.4 Configuration of a Safe Input 83

4.4.1 Structure of a Safe Digital Input 83

4.4.2 Configuration of a Safe Input 83

4.4.3 Example Wiring of a Safe Input 85

4.5 Configuration of a Safe Output 95

4.5.1 Structure of a Safe Digital Output 95

4.5.2 Configuration of a Safe Output 96

4.5.3 Using Unsafe Release Signals 96

4.6 Configuration of a Safety CPU 98

4.7 Calculating Monitor Settings (starting with Revision 2) 99

4.8 Reaction Time 99

4.8.1 Determining the Reaction Time in a Safety CPU with Local In- and Outputs 100

4.8.2 Determining the Reaction time of a Safety CPU with Remote In- and Outputs and Cross-Circuit Detection 103

4.8.3 Determining the Reaction Time with FSoE Communication 105

4.8.4 Fixed Time Parameters that Affect the Reaction Time 107

4.8.5 Configurable Time Parameters that Affect the Reaction Time 108

5 Operation 109

5.1 Processing the Safe Application 109

5.2 Operating the Validation Button 109

5.2.1 Explanation of the individual sequences 110

5.3 Error Diagnosis 114

5.3.1 Diagnosis through the LEDs 114

5.3.2 Diagnosis with the SAFETYDesigner 115

5.3.3 Troubleshooting 116

5.3.4 Safe Input Errors 117

5.3.5 Safe Output Errors 117

5.3.6 Configuration Distribution Errors 119

6 System Changes 122

6.1 Updating Safety Modules 122

6.2 Changing the Configuration 122

6.3 Exchanging Modules 123

6.3.1 Exchanging a Safety CPU 124

6.3.2 Exchanging a Safe In- or Output 124

6.3.3 Exchanging Several Safe In- or Outputs 124

6.3.4 Exchanging Safe Input or Output Modules with the SCP 010, SCP 011, SCP 111, SCP 111-S and SCP 211 Safety Modules 124

6.4 Adding a Safety Module 125

6.5 Removing a Safety Module 125

6.5.1 Safe Input Module Removed 125

6.5.2 Safe CPU Removed 126

6.5.3 Safe Output Module Removed 126

7 Special features of the System 126

7.1 Using Optional Modules (starting with Revision 2) 126

7.2 Safety Measures and Guidelines 128

7.3 Using Interface Variables (starting with Revision 2) 129

7.4 Master and Slave Mechanisms with the SCP 010, SCP 011, SCP 111, SCP 111-S and SCP 211 129

7.5 Using the SCP 010, SCP 011, SCP 111, SCP 111-S and SCP 211 in Stand-alone Mode 130

7.6 Communication via FSoE (Revision 4) 130

7.6.1 What is FSoE Communication 130

7.6.2 Creating an FSoE Connection between 2 Modules 130

7.6.3 Changing the Values 132

7.6.4 Watchdog Time 133

7.7 Creating an FSoE Connection through an IP Address 134

7.7.1 Settings using the IP Address and Allocation Service 134

7.7.2 FSoE Dialog for Writing Interfaces 136

7.7.3 FSoE Dialog for Reading Interfaces 136

7.7.4 Monitoring Settings for Reading Interfaces 137

7.7.5 Determining the Maximum Transmission Time 138

7.7.6 Advantages of the Allocation Service 141

7.8 Compatibility of S-DIAS Safety Modules 143

7.9 Parameter Lists 145

7.9.1 Use of Parameter Lists 145

7.9.2 Creating and Using Parameter Lists 145

7.9.3 Updating the Parameter List at Runtime 148

8 MDD 2000 (DIAS DRIVE 2000) 150

General Description 150

8.2.1 Designated Use ... 151
8.2.2 System Requirements ... 151
8.2.3 Encoder ... 152
8.2.4 Safety Functions ... 153
8.2.5 Function-related Control of the Drive ... 153
8.2.6 Standalone Operation ... 154
8.2.7 Operation with a Safety CPU ... 155
8.2.8 Verifying the Encoders ... 156
8.2.9 Referencing the Absolute Position ... 158
8.2.10 Procedure for Commissioning a Drive in Standalone Mode (without safety CPU) ... 159
8.2.11 Sequence of Commissioning a Drive with a Safety CPU ... 160
8.2.12 Procedure Encoder Exchange ... 161
8.2.13 Procedure for Exchanging a Drive ... 162
8.2.14 Procedure Exchange of a Safety CPU ... 163
8.2.15 Brake Test ... 164
8.2.16 Example of Creating a Configuration in Standalone Mode ... 165
8.2.17 Example for Creating a Configuration Together with a Safety CPU 171

9 EtherCAT for Safety Modules ... 178

9.1 Working in the SAFETYDesigner ... 178

9.1.1 Reading in Safety EtherCAT files (ESI files) ... 178
9.1.2 Hardware Tree with EtherCAT ... 179
9.1.3 Upload the Hardware Tree ... 181
9.1.4 Using EtherCAT Modules with an SCP 211 Safety CPU ... 182
9.1.5 Editing FSoE Init Parameters of EtherCAT Safety Modules ... 183
9.1.6 Editing SRA Parameters for Safety EtherCAT Modules ... 184

9.1.7 Selection of Inputs and Outputs for the Hardware Tree 184

9.1.8 CRC of the Configuration of an EtherCAT Safety Module 185

9.1.9 Exporting the configuration for LASAL CLASS 2 186

9.2 Working with LASAL CLASS 2 187

9.3 Importing the SAFETYDesigner Configuration in LASAL CLASS 2 187

10 Maintenance and Decommissioning 191

10.1 General 191

10.2 Requirements 192

10.3 Network Operator Requirements 192

11 Declaration of Conformity 193

12 Certificate S-DIAS I/O System with internal Bus 195

13 Appendix A: Troubleshooting 196

14 Appendix B: Troubleshooting MDD2000 297

Directory of Images

Fig. 1 Operating instructions structure 23
Fig. 2 Architecture of a decentralized control 26
Fig. 3 Safety Communication 27
Fig. 4 Architecture of a decentralized control 28
Fig. 5 Architecture of a decentralized control 29
Fig. 6 Example of a Safety system 32
Fig. 7 Connection of a handheld control panel 34
Fig. 8 Connection of a handheld control panel 35
Fig. 9 Module statuses 42
Fig. 10 POST mode 43
Fig. 11 Safety CPU in POST 44
Fig. 12 Safety CPU in idle mode 45
Fig. 13 Safety CPU in check configuration mode 46
Fig. 14 Safety CPU in temporary operational mode 48
Fig. 15 Safety CPU in operational mode 49
Fig. 16 Safety CPU in service mode 51
Fig. 17 Safety CPU in error mode 52
Fig. 18 Schematic diagram of the processing machine 58
Fig. 19 C-DIAS Hardware configuration 60
Fig. 20 S-DIAS Hardware configuration 61
Fig. 21 Hardware tree for example project 2 64
Fig. 22 Configuration of the start button S1_A 64
Fig. 23 Local Safe CPU network 65
Fig. 24 Network 2 66
Fig. 25 C-DIAS Hardware configuration of example 3 67
Fig. 26 S-DIAS Hardware configuration of example 3 68
Fig. 27 Optional safety applications 68
Fig. 28 C-DIAS Muting lamp control 69
Fig. 29 S-DIAS Muting lamp control 70
Fig. 30 Possible hardware configuration 71
Fig. 31 Optional safety applications 72
Fig. 32 Possible hardware configuration of VARAN system 1 73
Fig. 33 possible interface (write) Fig. 34 possible settings 73
Fig. 35 possible safety application VARAN system 1 73
Fig. 36 Possible hardware configuration of VARAN system 2 74
Fig. 37 Possible interface (read) Fig. 38 Possible settings 74
Fig. 39 Possible safety application VARAN system 2 74
Fig. 40 Memory setting options (VARAN system 1) 75
Fig. 41 Memory setting options (VARAN system 2) 75
Fig. 42 Simple error-free output 76
Fig. 43 Two-channel output 77
Fig. 44 Structure of a digital input 83
Fig. 45 Single-channel reading of an input 88
Fig. 46 2-chanel reading of an input 90
Fig. 47 2-channel control network 90
Fig. 48 Configuration of the Safe inputs 90

Fig. 49 Circuit of an Emergency stop function 93
Fig. 50 Schematic output circuit 95
Fig. 51 Using Non-safe Release Signals 96
Fig. 52 Hardware class of a Safe output module 97
Fig. 53 Local input - Safety CPU - local output 100
Fig. 54 Local input - Safety CPU - local output 101
Fig. 55 Sensors connected over two channels 102
Fig. 56 SIN: Local input - bus - Safety CPU - bus - SOUT: local output 103
Fig. 57 FSoE Communication 105
Fig. 58 Command input with the validation button 110
Fig. 59 Command input with the validation button 132
Fig. 60 FSoE connection 132
Fig. 61 PropertyBrowser 134
Fig. 62 PropertyBrowser 135
Fig. 63 FSoE Dialog for Writing Interfaces 136
Fig. 64 FSoE Dialog for Reading Interfaces 136
Fig. 65 Monitoring Settings for Reading Interfaces 137
Fig. 66 writing interface distributed to three projects 139
Fig. 67 3 writing interfaces distributed to one project 140
Fig. 68 2 writing interfaces distributed to two projects 140
Fig. 69 writing interface distributed to 50 projects 141
Fig. 70 Connection ID allocation service 142
Fig. 71 Remote maintenance concept 191

Directory of Tables

Table 1 Abbreviation Directory 12
Table 2 Danger and warning instructions 13
Table 3: Hardware class overview 30
Table 4 LED description 40
Table 5 In and output LEDs 40
Table 6 Validation Button LEDs 41
Table 7 Possible status change from POST 43
Table 8 Central Safety module wiring 62
Table 9 Decentralized Safety module wiring 63
Table 10 Module status depending on the configuration 98
Table 11 Configuration parameters of a 1-channel circuit 100
Table 12 Configuration parameters of a 2-channel circuit 101
Table 13 Configuration parameters of a 1-channel circuit with remote Safety modules ... 104
Table 14 Configuration parameter of a single-channel wiring with remote security modules 106
Table 15 Fixed parameters 107
Table 16 Settable time parameter 108
Table 17 Validation button command 112
Table 18 Module statuses and commands 112
Table 19 Validation command 113
Table 20 Permanent error 116
Table 21: Compatibility of S-DIAS Safety Modules 143

1 Introduction

1.1 General Instructions

1.1.1 Abbreviations

Abbreviation	Definition
Hardware tree	Graphic display of the hardware configuration in the Safety project.
HSS	High Side Switch
Network	Graphic image of a Safety module's the process code
PELV	Protected Extra Low Voltage
Module Safety number	Globally unique 4-byte safety number that serves as the address of a Safety module
PLC application	The application in the PLC
VARAN	**V**ersatile **A**utomation **R**andom **A**ccess **N**etwork
Cycle time	The runtime of the software component of a Safety module in which the following activities take place: Reading inputs and storing them in the input image Calculating the output image through the application Providing the outputs according to the output image Performing diverse background and administration tasks
FSoE	Fail Safe over EtherCAT[1]

Table 1 Abbreviation Directory

[1] "EtherCAT® and Safety over EtherCAT® are registered trademarks and patented technologies, licensed by Beckhoff Automation GmbH, Germany."

1.1.2 Symbols Used

For warning, danger messages and informational notes, the following symbols used in the operator documentation:

	Danger of electric shock	**DANGER!** Pay special attention to this instruction! In warns of imminent danger, which can cause severe injury and death, and provides the appropriate measures to be taken.
	Hot surface warning	On thermally conductive parts, high temperatures can be generated through power loss.
	General warning	Describes situations that pose a danger to personnel or in which the product or device in the surrounding area can be damaged and lists the appropriate measures to take.
	Important Guidelines	
	Danger for ESD-sensitive components	Danger for ESD-sensitive components
	INFORMATION	Provides user tips, informs of special features and identifies especially important information in the text.

Table 2 Danger and warning instructions

1.1.3 General Safety Guidelines

This “Safety System Handbook” extends the documentation. Both documents together fulfill the requirements of an operating instruction according to the guideline 2006/42/EG. According to guideline 2006/42/EG, the operating instructions are a component of a product.

- This Safety System Handbook and the documentation must therefore be accessible in the vicinity of the machine, since it contains important instructions.
- The operating instruction should be included in the sale, rental or transfer of the product

Please read the corresponding data sheets, operating instructions and this system handbook thoroughly before handling Safety modules. SIGMATEK GmbH & Co KG is not liable for damages caused through non-compliance with these instructions or respective the regulations.

The technical data of the Safety modules and the assembly instructions, see section 3, must be followed.

The general and special safety instructions described in the following sections, special safety instructions and technical regulations must therefore be observed.

Subject technical changes, which improve the performance of the devices. The following documentation represents a series of product descriptions and does not serve to guarantee properties under the warranty.

In regard to the requirements for Safety and health connected to the use of machines, the manufacturer must perform a risk assessment in accordance with machine guidelines 2006/42/EG before bringing a machine to the market.

	Always use the following Safety modules of the C-DIAS and S-DIAS series for their designated purpose. **C-DIAS:** **CSCP 011 / CSCP 012** **CSDI 161 / CSDI 162** **CSTO 081 / CSTO 082** **S-DIAS:** **SCP 010 / SDI 100 / SRO 020 / STO 040** **SCP 011 / SDI 101 / SRO 021 / SRO 022 / STO 081 / SDM 081 / SSI 021 / SIB 061 / SNC 021 / SAI 041** **SCP 111 / SCP 111-S / SCP 211** **DC 061 / DC 061-1 / DC 062 / DC 064 / DC 101 / DC 102 / DC 104 / ST 151 / ST 152** **HBG 0811 / HBG 0811-K / HBG 1011 / HBG 1011-1 / HBG 1011-H / HBG 1011-K / HGT 835 / HGT 835-TF / HGT 1035 / HGT 1035-H / HGT 1035-B / RBG 151 / HGT 1051 / HGW 1033-3 / HGW 0831-I / HGW 1033-32** **DRIVES** **MDP/MDD 2xxx**

1.1.4 Designated Use

The Safety functions implemented in the Safety modules are designed for use with safety-related applications in a PLC control and meet the required conditions for safe operation in SIL 3 according to IEC 62061 and in compliance with PL e. Cat. 4 in accordance with EN ISO 13849-1. These safety protection levels refer to 2-channel applications. In 1-channel operation some modules have lower protection levels. Please refer to the according EG type approval (TÜV certificate).

A minimum safety-related system can, for example, be implemented with a CSCP 011/012 module. To operate CSDI and/or CSTO modules, a CSCP module is required however.

The instructions contained in this document must be followed.
Safety functions can only be powered by supplies that meet the requirements for PELV in compliance with EN60294.
For error-free operation, proper transport and storage are essential.
Installation, mounting, programming, initial start-up, operation, maintenance and discarding of the Safety module can only be performed by qualified personnel.
Qualified personnel in this context are people, who have completed training or have trained under supervision of qualified personnel and have been authorized to operate and maintain safety-related equipment, systems and facilities in compliance with the strict guidelines and standards of safety technology. The applicable environmental conditions must be maintained.

For your own safety and the safety of others, the safety modules should be used for their designated purpose only.

Correct EMC installation is also included in the designated use.

Non-designated use consists of

- Any changes made to the Safety modules or the use of damaged modules.
- The use of the Safety modules outside of technical margins described in these operating instructions
- The use of the Safety modules outside of the technical data described in these operating instructions (see the "Technical data" sections of the respective production).

In addition, the Safety Guidelines in the other sections of these instructions must be observed. These instructions are visibly emphasized by symbol.

With regard to electrical safety, the requirements in the EN 60204-1 standard apply.

- For your own safety and that of others, compliance with the environmental conditions is essential.
- The control cabinet and the module carrier must be connected to earth correctly.
- For maintenance and repairs, disconnect the system from the power supply. Check for presence of power and protect against switching on.

1.1.5 Residual Risks

In the risk assessment defined by the 2006/42/EG guideline (machine guideline), the machine manufacturer must include the possible residual risks posed by Safety modules. These include:

1. **Unwanted movements of driven machine components.**
2. **Unwanted temperatures, emissions of gas, particles, smell and light.**
3. **Dangerous contact voltages**
4. **The effects of electrical, magnetic and electromagnetic fields produced during operation (for example, on pacemakers and implants).**
5. **Possible effects of information technology devices (cell/smart phones etc.).**
6. **Release of non-environmentally compatible substances and emissions.**

1.1.6 Special Safety Guidelines

Danger from electrically conductive components
The requirements in the EN 60204-1 standard apply.

- For your own safety, comply with the environmental conditions

During installation and operation of the machine, a high risk of electric shock from conductive components exists. Conductive components cannot be handled.

Improper or non-designated handling can cause damage to the machine, personal injury or death.

The electrical connections cannot be removed while voltage is applied. Before removing connections, a controlled shutdown of the machine must be performed and the supply disconnected. Check for presence of power and protect against switching on.

After shutdown or separation of the voltage supply, a wait-time of 5 minutes is required before voltage-conducting components can be touched or connectors removed.

For safety purposes, measure the voltage and wait until it has reached a value below 40 V.

Noncompliance with the instructions can lead to system damage as well as serious injury or death!

Danger, hot surfaces
During installation and operation, high temperatures can be generated on thermally conductive parts (heat sinks). Before touching these components, the temperature must be checked. When required, the operator must wait until the temperature has dropped below 40 °C.

Failure to follow the above safety measures can lead to severe injuries.

The machine manufacturer is responsible for ensuring the correct handling with Safety modules and if necessary, takes organizational measures to ensure access.

1.2 Safety of the Machine or Equipment

Strict compliance with the safety guidelines is required, otherwise all warranties and claims are invalid:

	Observe all on-site rules and regulations for accident prevention and occupational safety.

1.3 Guidelines and Norms

The Safety modules were designed to meet the requirements of the following norms:

- EN IEC 62061
- EN ISO 13849-1
- EN ISO 13849-2

In regard to the application in a machine, the user must first perform a risk analysis in compliance with the following norms:

- EN ISO 12100-1/-2 und EN ISO 14121
- EN 60204-1
-

Note: Depending of the application resp. type of machine the requirements of other C-Type standards (e.g. elevator) can be necessary.

1.4 EU Conformity Declaration

CE Declaration of Conformity

The Safety modules comply with European norms for programmable logic controls.

- 2006/42/EG “Directive of the European Parliament and of the Council of 17 May 2006 on Machinery and Change to the Directive 95/16/EC” (machine guideline)
- 2014/30/EU “Electromagnetic Compatibility” (EMC guideline)
- 2011/65/EU Restricted use of certain hazardous substances in electrical and electronic equipment (RoHS Guideline)

The EU Conformity Declarations are provided on the SIGMATEK website.

1.5 Service Life, Operating Time and Switching Cycle Times

Service life

The maximum service life of all Safety modules is 20 years. The Safety module must be replaced, at the latest, after the maximum service life has elapsed. The appropriate measures must therefore be taken to ensure that this requirement is met.

Operating time

In certain cased, as with Safety modules that have mechanical relays, the service life can be reduced through shorter "operating times". For example, when the maximum number of switching cycles have be reached. When the operating time has been reached, the respective component must be replaced; even if the service live has not yet elapsed. The formula for calculating the operating time can be found in the respective documentation.

Switching Cycle Times

The safety indices (diagnostic options) of the safe inputs and outputs are based on the assumption that the safe inputs and outputs are switched at least once a year.

If regular switching with an interval of less than 1 year in the machine cannot be ensured by normal operation, manual switching must be carried out at least once a year.

Emergency stop switches on handheld terminals must be checked at least once every 30 days!

The appropriate measures must therefore be taken to ensure that the requirements for service life, operating time and switching cycle times are met.

1.6 Using Modules of Revision 1, Revision 2 and Revision 3

The revision numbers describe an internal difference between the hardware modules and are visible in the Property browser of each module. The difference is necessary, since depending on the revision, the module parameter settings (e.g. the filter time) or the structure of the configuration data (data for downloading to the module) are different.

Modules of Revision 1 are:

- CSCP 011
- CSDI 161
- CSTO 081

Modules of Revision 2 are:

- CSCP 012
- CSDI 162
- CSTO 082
- SCP 010 with input and output cards
-

Module of Revision 3:

- SCP 011 with input and output cards

Modules of Revision 4 are:

- SCP 111 with input and output cards

The user can combine the modules between the C-Dias Safety systems, as well as the SCP 010 and SCP 011. The combination with the SCP 111 is not allowed, since it is used for the Safety-related communication that uses the FSoE protocol over VARAN. With a mixture of revisions, the configuration is generated based on the module with the lowest revision. The modules SCP 010, SCP 011 and SCP 111 are always generated with their own revisions.

In the following chapters, the user will be informed of the functional differences between the reversions through the following description.

	For revision 1, **Revision 1** is written. For revision 2, **Revision 2** is written. For revision 3, **Revision 3** is written. For revision 4, **Revision 4** is written.

1.7 Documentation

The documentation is constructed as follows. The Safety System handbook is the primary document for the C-DIAS and S-DIAS Safety system. The LASAL SAFETYDesigner handbook describes the operation of the configuration tool. The operating instructions for the individual Safety modules

- CSCP 011
- CSDI 161
- CSTO 081
- CSCP 012
- CSDI 162
- CSTO 082
- SCP 010
- SDI 100
- STO 040
- SRO 020
- SCP 011
- SDI 101
- STO 081
- SRO 021
- SRO 022
- SSI 021
- SNC 021
- SDM 081
- SCP 111
- SCP 111-S
- SCP 211
- SAI 041
- DIAS-DRIVE 2000
- Further developments

contain their technical data in detail as well as the required specifications for their use.

The LASAL CLASS 2 handbook is provided to integrate the Safety System into the standard control.

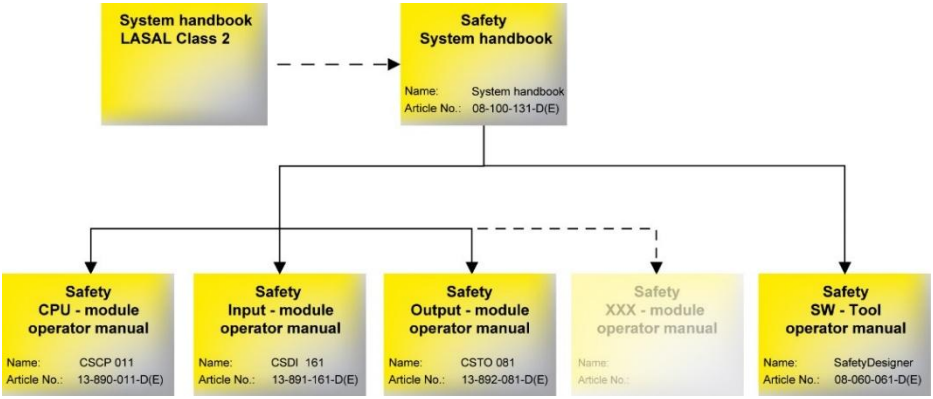

Fig. 1 Operating instructions structure

1.8 System Requirements

The **C-DIAS Safety** components require at least the following system versions:

LASAL operating system	01.02.076 or higher
Hardware class version:	2.10 or higher
SAFETYDesigner version:	01.00.004 or higher

Starting with Revision 2:

LASAL operating system	01.02.190 or higher
Hardware class version:	2.39 or higher
SAFETYDesigner version:	01.01.002 or higher

The hardware versions of the Safety modules are found in the respective operating manual.

The C-DIAS Safety components are compatible with all C-DIAS products from SIGMATEK GMBH & CO KG.

The **S-DIAS Safety** components require at least the following system versions:

LASAL operating system	01.02.225 or higher
Hardware class version:	1.0 or higher (classes for SCP 010)
SAFETYDesigner version:	01.01.003 or higher

Starting from Revision 3.

LASAL operating system	01.02.245 or higher
Hardware class version:	1.0 or higher (classes for SCP 011 and their expansion cards)
SAFETYDesigner version:	01.01.007 or higher

Ab Revision 4:

LASAL operating system:	01.03.015 or higher
Salamander OS:	09.01.140 or higher
Hardware class version:	1.0 or higher (classes for SCP 111)
SAFETYDesigner version:	01.01.030 or higher

The **MDD 2000** components require at least the following system versions:

Salamander OS:	09.03.190 or higher
Hardware class version:	1.0 or higher
Motion version:	1.0 or higher
SAFETYDesigner version:	01.01.070 or higher

The use of the **EtherCAT bus** requires at least the following system requirements:

LASAL CLASS 2: 02.02.245 or higher
Salamander2 OS (x86): 09.02.230 or higher
Salamander3 OS (ARM): 09.04.090 or higher

Salamander4 OS (x86): 09.07.180 or higher
Hardware library: 110 or higher
SAFETYDesigner version: 01.01.078 or higher

2 Introduction to the C-DIAS and S-DIAS Safety System

2.1 C-DIAS Safety System Structure

With the C-DIAS Safety component series, the control system from SIGMATEK is expanded with Safety functions. Through a decentralized configuration and component modularity, **existing systems can be easily expanded with Safety functions**. The basis of SIGMATEK Safety components is the appropriate hardware solutions, which regularly monitor themselves to detect possible errors and put the machine in a safe status if necessary. **The entire system meets the standards** specified by Performancelevel e (PL e) and category 4 according to EN ISO 13849 and/or SIL 3 according to EN 62061.

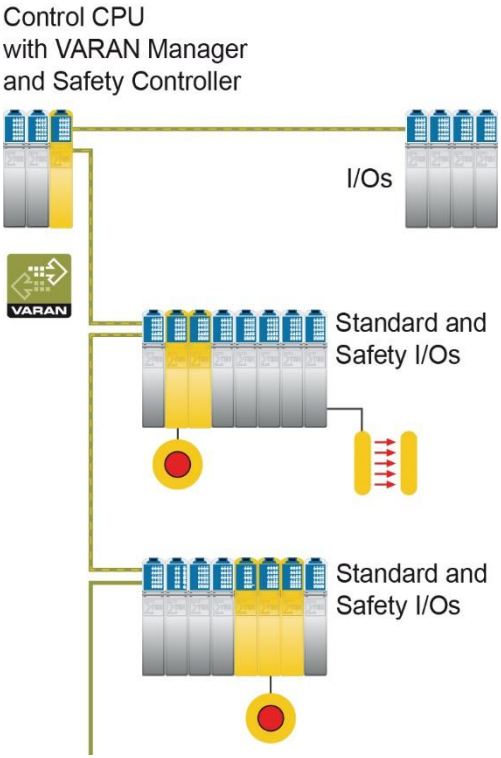

Fig. 2 Architecture of a decentralized control

The Safety components are completely integrated into the control system. **With the modular construction, Safe and non-Safe components can be combined as desired**. The individual requirements for various machine types can therefore met.

In comparison to classic safety systems, the wiring is drastically reduced. A description of the standard control system can be found in the LASAL Class 2 documentation.

Also for communication, **no additional wiring is needed.** For **both Safe and non-Safe signals,** only one bus system is used: The Ethernet-based, hard real-time VARAN bus (**V**ersatile **A**utomation **R**andom **A**ccess **N**etwork). For communication between the Safety components, the "Black-Channel" principle is used, in which the bus does not assume any safety-relevant tasks but serves as a data exchange medium only. For this, the specially developed safe bus protocol is used.

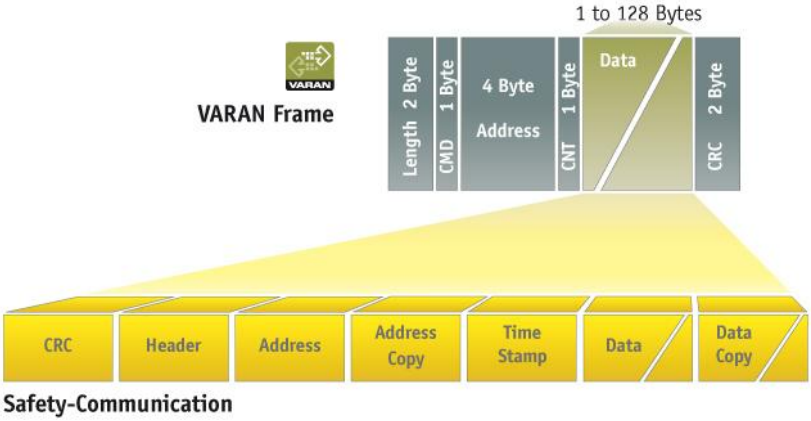

Fig. 3 Safety Communication

2.2 S-DIAS Safety System Structure

The modular concept of the S-DIAS Safety system allows the simple implementation of customer-optimized I/O requirements.

Fig. 4 Architecture of a decentralized control

The photo above shows the CPU unit (here for example: SCP 010) with expansion modules (here for example: 10 inputs, 4 transistor outputs and 2, two-channel relay outputs). The minimum configuration consists of a CPU unit and one expansion module. A stand-alone mode without bus connection is possible.

The safety-related components meet the requirements for **SIL 3** in accordance with EN 62061 and **PL e**, **cat. 4** in accordance with EN ISO 13849-1

The Safety components can be completely integrated into the control system. **With the modular construction, Safe and non-Safe components can be combined as desired**. The individual requirements can for various machine types can therefore met.

Fig. 5 shows an example of the topology of a control system with Safety modules from the S-DIAS series, which corresponds to that in diagram 2. It is also possible to combine Safety modules from the C-DIAS and S-DIAS series in the same application (see section 1.5). Combining the two systems is not possible when the SCP 111, SCP 111-S or SCP 211 is installed, since Safety-related communication is established through the FSoE over VARAN.

Fig. 5 Shows a topology implemented with components of the S-DIAS series that corresponds to that of Fig. 2.

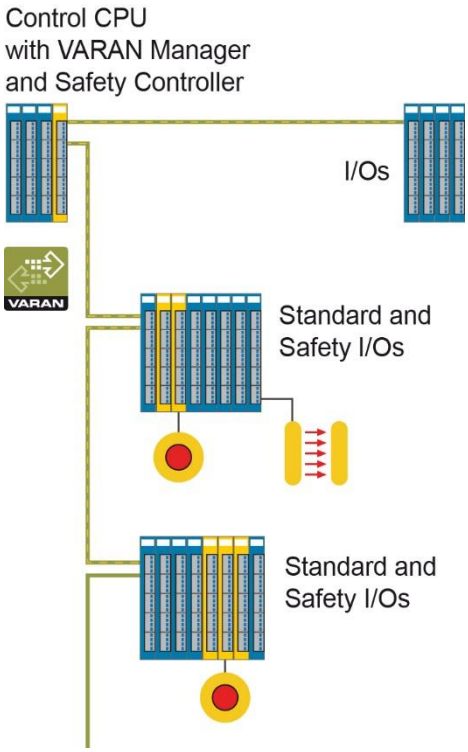

Fig. 5 Architecture of a decentralized control

2.3 Topology of the Safety System

2.3.1 General Topology

The Safety modules are embedded in the standard control system from SIGMATEK GMBH & CO KG. The LASAL Class 2 configuration tool is provided for configuring the standard PLC. This is an object-oriented programming environment in which the module used - regardless of whether it is a standard or Safety module - has its own class.

In the object-oriented programming with LASAL, a project consists of several classes. Whereby each class can consist of clients, servers and global methods as interfaces to other classes. With clients, a class accesses external data or functions. With servers and global methods, a class can provide data or functions. Classes that control hardware are called hardware classes.
The following hardware classes are available for the Safety modules:

Hardware Classes	Safety module
CSDI161_IM	CSDI 161 Safe input module
CSCP011_IM	CSCP 011 Safe CPU
CSTO081_IM	CSTO 081 Safe output module
CSDI162_IM	CSDI 162 Safe input module
CSCP012_IM	CSCP 012 Safe CPU
CSTO082_IM	CSTO 082 Safe output module
SCP010	SCP010 Safe CPU
SCP011	SCP 011 Safe CPU
SDI101	SDI 101 Safe input module
STO081	STO 081 Safe output module
SRO021	SRO 021 Safe relay module
SRO022	SRO 022 Safe relay module
SSI021	SSI 021 Safe encoder module
SNC021	SNC 021 SNC incremental encoder
SDM081	SDM 081 Safe mixed module
SCP111	Safe CPU SCP 111
ST151	ST 151 Step motor card
ST152	ST 152 Step motor card
_DriveMng_DC061	S-DIAS Axis module DC 061 and DC 061-1
_DriveMng_DC062	S-DIAS Axis module DC 062
_DriveMng_DC064	S-DIAS Axis module DC 064
_DriveMng_DC101	S-DIAS Axis module DC 101
_DriveMng_DC102	S-DIAS Axis module DC 102
_DriveMng_DC104	S-DIAS Axis module DC 104
MDD2000_Mng, MDD2000_Axis	MDD 2000

Table 3: Hardware class overview

The C-DIAS Safety modules must be installed on a C-DIAS module carrier. The module carrier is connected to the standard PLC (e.g. a C-IPC) directly or through a coupler module (e.g. CIV 512).

The coupler modules communicate over the VARAN bus, for example. The bus master and the Safety CPU must fit on a module carrier.

The S-DIAS Safety modules can be integrated into the standard system through a coupler module (e.g. VI 020).

The S-DIAS modules (e.g. SCP 010, SCP 011, SCP 111, SCP 111-S and SCP 211) can also be used in a stand-alone version; the modules do not have to be integrated into the standard system.

A typical control system configuration is shown in Fig. **6**.

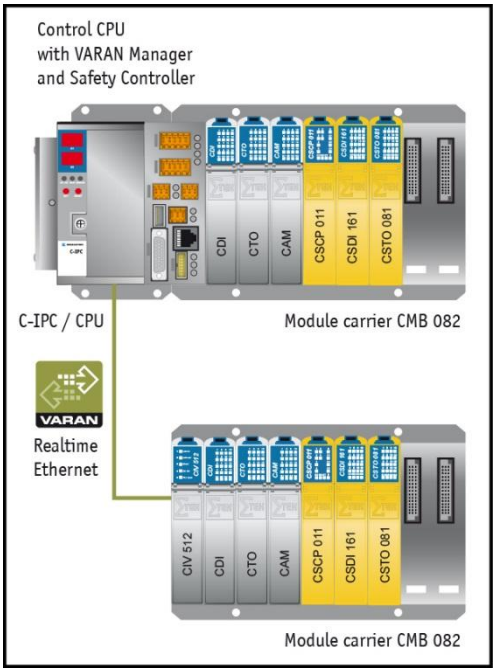

Fig. 6 Example of a Safety system

The Safety module is not configured through the standard PLC, rather through the SAFETYDesigner. The Safe application is processed in the Safety module directly (e.g. a Safety CPU).

When creating a Safety control, the following steps must be taken:

- Install and wire the Safety modules.
- Place the Safety modules in a standard PLC project and configure the interfaces with the standard control.
  In this step, the corresponding hardware class for each Safety module must be placed and configured. For example, the appropriate slot on the C-DIAS bus carrier must be entered.
  S-DIAS modules in stand-alone mode do not have to be placed in a standard PLC project.

- Configure the Safety module with the SAFETYDesigner.
  Through the SAFETYDesigner, the Safe application that will run in the Safety modules is created and downloaded.

- Validation of the Safety system.
  After the Safe application has been created and loaded into the Safety module, the system must be tested to ensure correct function.

2.3.2 Safety Modules

Generally, there are four different module groups.

- ***Safe CPUs***
  A Safe CPU, such as the CSCP 011 Safe module, has four Safe inputs and two Safe outputs. The configuration is loaded to the Safety CPU through the LASAL SAFETYDesigner or for example, from an SD card. The Safety CPU then distributes the configuration to the appropriate remote modules, which are included in the configuration.

- ***Safe in- and output modules***
  Safe in- and output modules, such as the CSDI 161 or CSTO 081 are configured by the Safety CPU. With the SAFETYDesigner or the standard PLC, the Safety modules can be read only.

- ***S-DIAS Safety modules***
  The SCP 010 Safety CPU can be used with a max. of two SDI 100 input cards, an STO 040 output card and two SRO 020 relay cards.
  The SCP 011, SCP 111, SCP 111-S and SCP 211 Safety CPU can support a max. of 16 cards (SDI 101 input card, STO 081 output card, SRO 021 or SRO 022 relay card, SSI 021 encoder card, SNC 021 SNC incremental encoder, SDM 081 mixed card), A maximum of 8 SRO 021 relay cards can be inserted (relay cards require two slots.
  With both Safety CPUs, 8 additional Safe inputs can be connected through a Safety Interface. The configuration is loaded to the Safety CPU through the LASAL SAFETYDesigner or for example, from an SD card. The Safety CPU then distributes the configuration to the appropriate remote modules, which are included in the configuration.

- ***Safe Drive***
  The MDD2000 drive has integrated safety functions (e.g. STO) and can be operated in stand-alone mode as well as in combination with a safe CPU.

2.3.3 Safe Status

The Safe status always corresponds to the low signal. If the system is in the operation or temporary operational mode, the Safe outputs are always deactivated. This means the output is at mass potential. This also applies to the error status.

2.3.4 Hand Control Unit

A Safety Interface bus interface is implemented in the S-DIAS SCP 010 or SCP 011 Safety module, to which a handheld panel can be connected as shown in Fig**. 7** for operation and monitoring of processes. In compliance with EN 60204-1, section 10.7.1, this handheld panel is can support the Emergency Stop safety function.

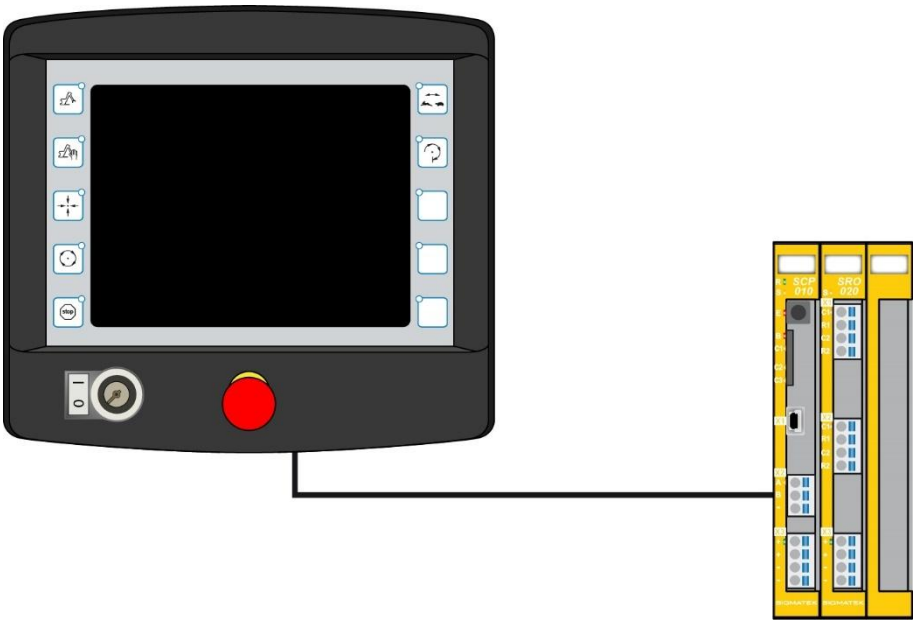

Fig. 7 Connection of a handheld control panel

Fig. 8 Connection of a handheld control panel

The handheld panels (e.g. HBG 0811, HBG 0811-K, HGT 835, HGT 835-TF, HGT 1035, HGT 1035-H, HGT 1035-B, HBG 1011, HBG 1011-1, HBG 1011-H, HBG 1011-K, RBG 151, HGT 1051) may only be operated with the SCP 010, SCP 011, SCP 111 , SCP 111-S and SCP 211 Safety modules! The handheld panels HGW 0831-I, HGW 1033-3 and HGW 1033-32 may only be operated with the SCP 111, SCP 111-S and SCP 211 Safety modules!

As required by EN ISO 13850, section 4.1 and EN 60204-1, section 10.7.1, it must be ensured that no confusion between a functioning and non-functioning hand-held panel is possible.

2.3.5 Safety Interface

The Safety interfaces of the SCP010, SCP011 and SCP111 are largely compatible with CAN. The interfaces are operated with a baudrate of 500 k.
The following IDs are used by the Safety CPUs:

Id	Usage	Comment
0x55A	Power on self test	
0x100	Cyclically sending	Since SAFETYDesigner BuildNo 2320 for SCP011 since FWV377 and for SCP111 since FWV458 it is possible to suppress the usage of this ID.
0x740	Cyclically sending	

		If the usage of this ID is suppressed, no usage of handhold control devices or SIB 061 is possible.
0x200	Receiving	

2.4 Communication in the Safety System

With the SAFETYDesigner, all Safety modules can be read. Write access is only possible with the Safety CPU to, for example, load the configuration. The remote modules included in the configuration are configured over the Safety CPU directly. Alternatively, the configuration can also be loaded to the Safety CPU from an SD card.

With the S-DIAS Safety modules, the SAFETYDesigner has only read and write access to the Safety CPU. There is no communication with the insert cards (SDI 100, STO 040, SRO 020, SDI 101, STO 081, SRO 021, SRO 022, SSI 021, SNC 021, SAI 041 and SDM 081).

2.5 System Characteristics

2.5.1 Configuration Characteristics

In creating the configuration, there are certain restrictions. A Safe input or output module may only be addressed by a project. If a second project is generated, which accesses the Safety modules used in another project, the Safety modules are overwritten with the configuration downloaded last.

In the same project, a Safe output - whether a remote Safety module or the safety CPU itself - is restricted from being set by more than one object. Safe inputs can, in comparison, be used by several objects in the same project.

The Safe outputs can be reset and then reused. This is described in the LASAL SAFETYDesigner.

In a project, a maximum of 128 Safety modules are used.

Changing and Exchanging Safety Modules

A module can only be changed when deactivated. The exchange of a Safety module is detected. When several Safety modules are exchanged, an error message is displayed and the system must be reconfigured. If several modules are exchanged, the system must be reconfigured and validated.

When optional Safety modules are exchanged, the system must be reconfigured and validated. This can be done either through the SAFETYDesigner or with the SD card.
If this re-validation does not take place, the SCP loses its configuration and switches to an error state (ERRVAL 222 / 1222 Temporary Operation Time – see chapter 2.6.4). This is a safety measure for unauthorized modules in our Safety system.

When exchanging SNC, the incremental encoder must be taught again, see product documentation.

2.5.2 System Configuration

2.5.2.1 Configuring the System with the SAFETYDesigner

The system is configured with the "LASAL SAFETYDesigner " software tool. The application is generated in the SAFETYDesigner. Standard function blocks such as AND gates are thereby available. In addition, complex function blocks are provided that meet the PLC-Open standard.

The Safe application is assembled from the available function blocks. The Safe in- and outputs are thereby connected accordingly. The safe Safebool in- and outputs have a special format that allows three conditions:

- Safebool_True
- Safebool_False
- Safebool_Error

The signals from the standard PLC can have the two logical states, True and False. If, for example a signal from the standard PLC is connected to a Safe AND gate, it must first be converted to a Safe signal format with the appropriate function block.

With the SAFETYDesigner, signals from the standard PLC can be read and used in the Safe application.

An output calculated by the Safe application can be deactivated with a release signal from the unsafe PLC. When used, an unsafe release signal must be connected to the corresponding safe output over the respective "Unsafe Output" pin when configuring the hardware classes. In the reverse case, an unsafe release signal cannot activate an output deactivated by the safe application.

The configuration created can be loaded to a Safety CPU with the SAFETYDesigner. The Safety CPU then distributes the data to the necessary remote Safety modules. Among other things, the module Safety number of the Safety CPU into which the configuration is loaded must be confirmed during the configuration download. The transferred data is stored in the Safety CPU by the SAFETYDesigner CRC. The transferred data is then read back from the SAFETYDesigner through a newly calculated CRC. The user can thereby test whether the download and upload data correspond to one another. More information can be found in the LASAL SAFETYDesigner description.

2.5.2.2 Configuring the System with the SD Card

The configuration can also be distributed by an SD card. For this purpose, the SD card must be loaded. The Safety CPU must change to the service mode. If the Safety CPU is in Service mode, the SD card can be inserted and loaded with the SAFETYDesigner ("Write SD-Card" command). After loading the SD card, it can be inserted into another Safety CPU. The corresponding Safety CPU, however, must be disconnected from power. If the Safety CPU has no configuration, it loads the configuration from the SD card during start-up. A detailed description of the system configuration with the SD card can be found in chapter 4.3.

2.5.3 System Changes

Changes to the system can occur through changes in the Safe application or the configuration as well as when a Safety module is removed, added or exchanged. The exchange of a Safety module is supported by the system; the simultaneous exchange of several Safety modules however, is not. A detailed description can be found in chapter 6.

2.5.4 Reaction and Turn-off Time

The reaction time from a Safe input to a Safe output from the Safety PLC is estimated by the SAFETYDesigner while creating the Safe application. The reaction times of the sensors connected to the input or to the output circuit is not in the reaction time estimated by the SAFETYDesigner. With the modules SRO 021 and SRO 022 (module with relays), the reaction time of the relay is included in the calculation.

The SAFETYDesigner estimates a worst-case reaction time. More details are provided through examples in chapter 4.8.

2.5.5 Safety Module LEDs

To test the status of a Safety module during operation, the Safety modules are equipped with LED displays with which the following information is communicated.

LED	LED	Function
DC	green	Signals whether the +24 V supply for outputs and pulse outputs are within the defined limits
RN	green	Run signals The limited time ("ST" LED on) or The time-unlimited (LED "ST" off) operation mode
ST	yellow	Status Lights permanently: the module is in service mode Slow blinking frequency: the module is currently in Idle or Check Configuration mode (distribution of the configuration)
E	red	Error Lights permanently: the module is in error mode Slow blinking frequency: the maximum age has been exceeded for a removed input (can be read with the SAFETYDesigner) Fast blinking frequency: serious error; communication with the module is no longer possible (CANNOT be read with the SAFETYDesigner)

Table 4 LED description

If a Safety module has Safe and non-Safe in- or outputs, an LED display is provided for each. The position of these LEDs can be found in the corresponding data sheets. Generally, these LEDs can display three conditions:

LED status	Function
Off	If the LED is off, the Safe input contains a logic "0" or the Safe output is off.
Lights	When the LED is lit, the Safe input contains a logic "1" or the Safe output is on.
Blinking	If the LED blinks, an error was detected. The possible errors are listed in chapter 5.3

Table 5 In and output LEDs

If the Safety module is a Safety CPU, four additional LED displays are provided to operate the validation button:

LED	LED	Function
B	Red	Signals whether the validation button was pressed Lights: A valid sequence was entered. Fast blinking: An invalid sequence was entered. The invalid sequence is then discarded. Slow blinking (1x, 2x or 3x) to confirm that the entered command was executed.
C1	Yellow	Confirmation that the input for command 1 was sent after a valid start sequence.
C2	Yellow	Confirmation that the input for command 2 was sent after a valid start sequence.
C3	Yellow	Confirmation that the input for command 3 was sent after a valid start sequence.

Table 6 Validation Button LEDs

2.5.6 Diagnosis

In the C-DIAS and S-DIAS Safety system, there are two different options for diagnosis.

- Through the LED displays of the Safety modules.
- Through the SAFETYDesigner. Here, an online connection with the appropriate Safe control must exist and the corresponding project in the Safety CPU must be opened. The corresponding errors in the Safety modules can then be read. More information is available in chapter 5.3.

2.6 Operating Modes

A Safety CPU module takes each of the operating modes shown in Fig. **9**. Safe Input and Safe output modules on the other hand, do not necessarily take every operating mode. The operation modes of a Safety CPU are:

- Post (Power On Self-Test)
- IDLE
- Check Configuration
- Temporary Operational
- OPERATIONAL
- SERVICE
- Error

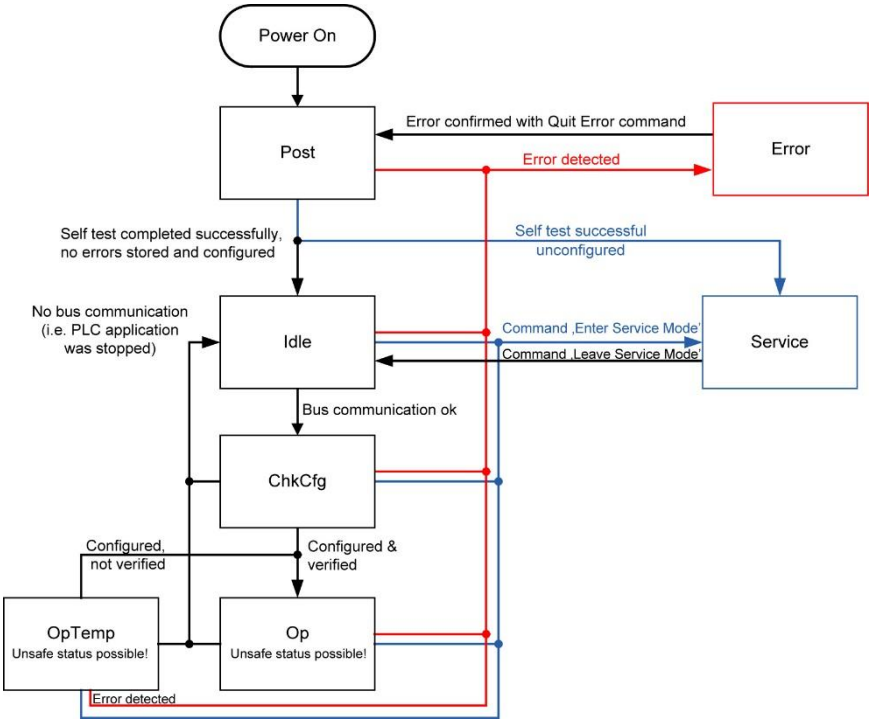

Fig. 9 Module statuses

The mode transitions during runtime are described in the following sub sections.

2.6.1 Post – Power On Self-Test

After turning on or restarting, the Safety CPU performs a self-test. It also checks the configuration status (configured/not configured) and depending on the result of this test, goes into either the idle, service or error mode (compare
Fig. **10**).

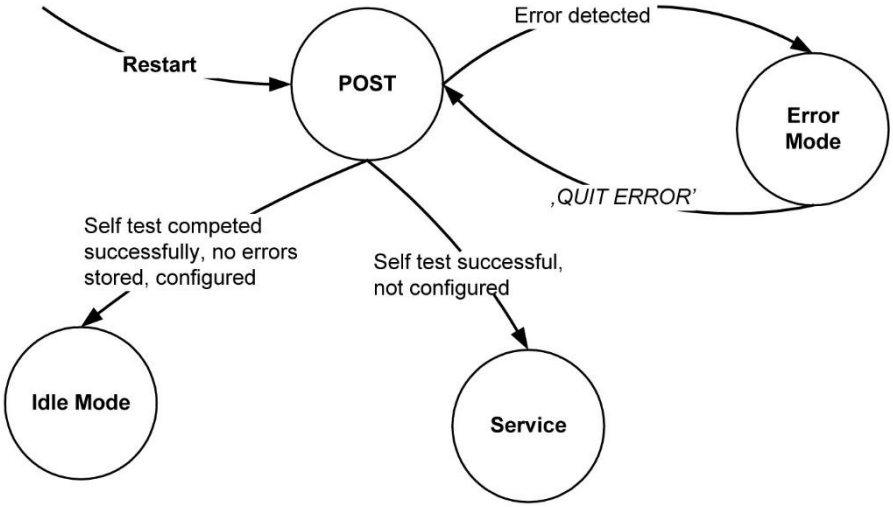

Fig. 10 POST mode

Branches off into	Only if
IDLE	The self-test is error-free There are no stored errors Configuration status: "configured"
SERVICE	The self-test is error-free Configuration status: "not configured"
ERROR	Error occurred during POST

Table 7 Possible status change from POST

Except during power-up (restart), a mode change is triggered after the POST when an existing error is confirmed with "QUIT ERROR". This command can be triggered in the Safety CPU with help from the SAFETYDesigner as well as with the validation button. The Safe I/Os in the respective modules are in "Safe status" during the POST!

No LED lights

Fig. 11 Safety CPU in POST

2.6.2 IDLE

The module is ready for the transition to the check configuration mode (ChkCfg). This module enters this mode when the PLC application freezes; this means that there is no communication with the PLC application. To exit the idle mode, the Standard PLC must no longer be in the error mode. In the idle mode, the Safe I/Os in the respective modules are always in "Safe status".

ST LED blinks slowly

Fig. 12 Safety CPU in idle mode

2.6.3 ChkCfg – Check Configuration

The module checks the configuration. A Safety CPU checks the configuration of the connected Safe I/O modules and updates them if necessary. The Safe I/O modules remain in this status in case a module safety number of a remote module must be determined. The Safe I/Os in the respective modules are always in "Safe status". If an error occurs during the check configuration phase, the module changes to the error mode after a timeout (Error LED lights). The error can then be read through the SAFETYDesigner (see Diagnosis chapter). If the check configuration phase is completed successfully, the module changes to the OpTemp or operational mode.

ST LED blinks slowly

Fig. 13 Safety CPU in check configuration mode

2.6.4 OpTemp – Time limited Operational Mode

The module is in time-limited operation. In this mode, the validation of the Safety system must be run. This means that the configured Safety control must be tested for correct function. As long as the module is not verified, it cannot change to the Op mode. If no verification is performed within a certain time (Temporary Operation time), the module goes into the error mode (with error code 222 or 1222 see SAFETYDesigner documentation).

For Safety CPUs of the C-DIAS series, as well as for the SCP 010, SCP 011, and SCP 111 up to and including firmware version V464, the Safety application is additionally deleted when the Temporary Operation Time expires. As a result, the project must be reloaded afterwards. If a “Quit Error” command is issued or a restart is performed afterwards, the module switches to Service Mode.

For the SCP 111 from firmware version V465 onward, as well as for the SCP 211, the Safety application is not deleted when the Temporary Operation Time expires. If a “Quit Error” command is issued or a restart is performed afterwards, the timeout is reset and the module can run again. Validation can then be continued.

The Temporary Operation time must be configured in the Safety designer and can be set between a minimum of 300 seconds and a maximum of 28800 seconds. The Safe I/Os of the respective modules are activated or deactivated as required by the application.

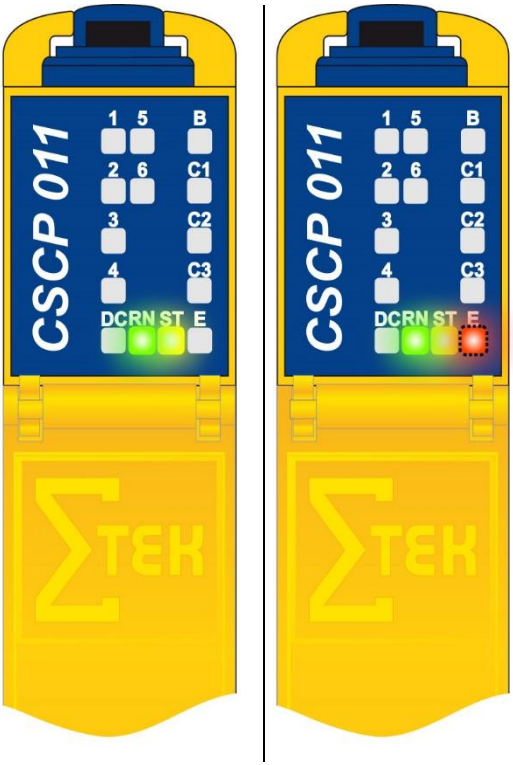

LED RN&ST lights

With remote input errors,
E blinks slowly

Fig. 14 Safety CPU in temporary operational mode

2.6.5 Op – Operational

The module is ready for unrestricted operation. The Safe I/Os of the respective modules are switched according to the application.

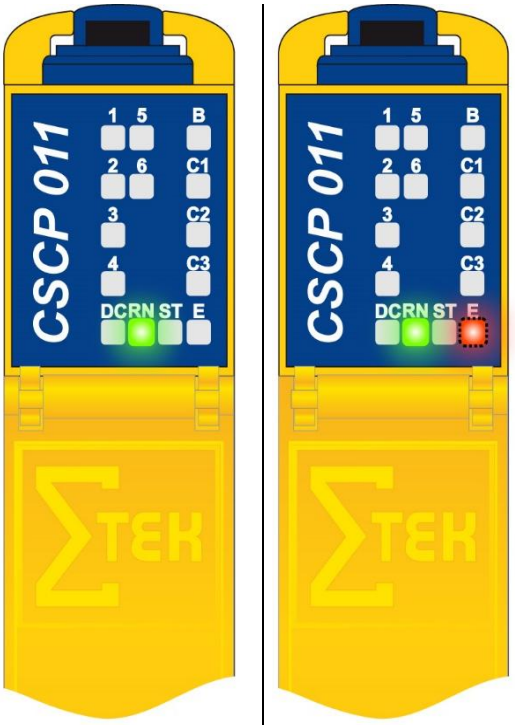

LED RN lights

With remote input errors, E blinks slowly

Fig. 15 Safety CPU in operational mode

2.6.6 Service – Service Mode

The Safety modules are configured in service mode. The Safety modules are delivered in the service mode. To change the configuration, the service mode must be enabled. For this purpose, login at the configuration level of the Safety CPU is required.

In the newly delivered Safety modules, a password must be entered (described in the LASAL SAFETYDesigner).

The service mode offers the following options through the SAFETYDesigner:

- ***"Clear Program"***
  With this command, the configuration in the Safety CPU is deleted. If the Safety module is not configured, it can no longer return to the operational or temporary operational mode.

- ***"Download"***
  With the download command, the configuration designed or modified in the SAFETYDesigner is loaded to the Safety CPU in the project.

- ***"Write SD Card"***
  If an SD card is inserted into the Safety CPU during the service mode for example, it can be written to with the "Write SD Card" command. The projected opened in the SAFETYDesigner is then written to the SD card.

- ***"Set Verified"***
  After the configuration is loaded and the system runs in the temporary operational mode, the "Set Verified" command can be executed after the successful validation of the system. After executing this command, the unrestricted operational mode can be enabled (see "Start" command)

- ***"Start"***
  With the Start button, it is possible to change from the service to the operational mode or temporary operational mode. After downloading the configuration from the SAFETYDesigner to the corresponding Safety CPU, the configuration is distributed to the remote Safety modules by pressing the "Start" button. After successfully distributing the configuration, the system changes to the temporary operational mode. If the "Start" button is pressed after "Set Verified" command has been successfully executed, the operational mode is started.

- ***"Quit Error"***
  This command can also be sent in the service mode. By executing Quit Error, the login is reset, which means that a new login is required to re-access the service mode. Sending the "Quit Errors" command in the service mode is practical if remote Safety modules have an error and they should be configured.

The Safe I/Os in the respective modules are thereby in "Safe status".

LED ST lights

Fig. 16 Safety CPU in service mode

2.6.7 Error – Error Mode

In this mode, the module remains in error mode until a "Quit Error" command is sent. The POST mode is then activated so that the self-test is performed again. The Safe I/Os in the respective modules are thereby in "Safe status".

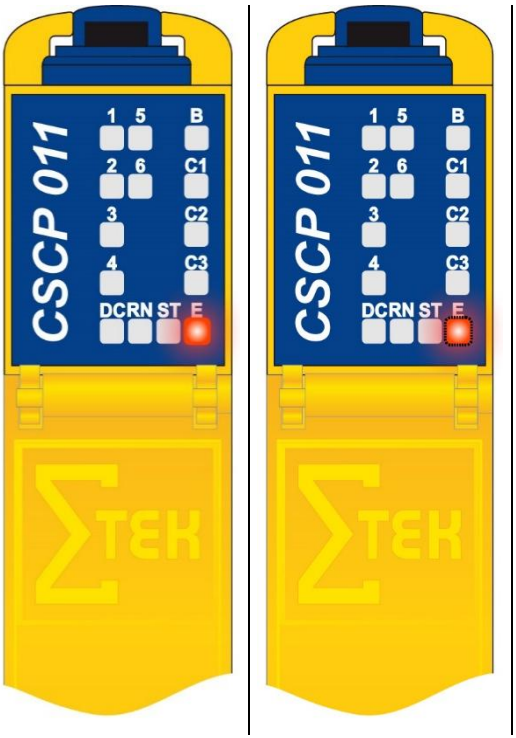

LED E lights

with a HW defect (LED E blinks fast)

Fig. 17 Safety CPU in error mode

2.6.8 SAI 041 – Auto Quit

2.6.8.1 Using the Auto Quit Mode

The additional property ("**AutoQuit**") of an SAI041 input channel is provided in order to be able to deactivate the internal restart interlock for each input channel, i.e. after error situations on the module and/or on the network, the associated channel data automatically return to the correct state.

The inactivation of the restart interlock is only to be used in connection with an expected value in the Safety application. In case of a discrepancy, the safe state must be initiated and the Safety CPU stops the application. It is the user's responsibility to correctly connect the channel data of the safe input channels and to provide them with a restart interlock. For this purpose, the restart interlock of the function block Restart_Interlock can be used, for example.

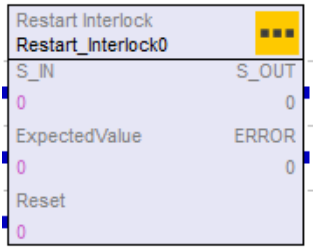

The user is advised to use the function block or create his own restart interlock.

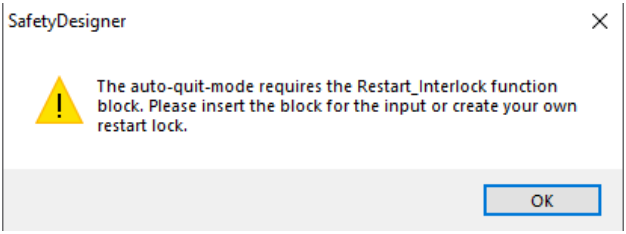

The use of input channels without a correctly connected restart interlock can result in an automatic restart.

Examples for the use of restart interlocks:

Example 1: Error at the input of SAI041, expected value = FALSE:

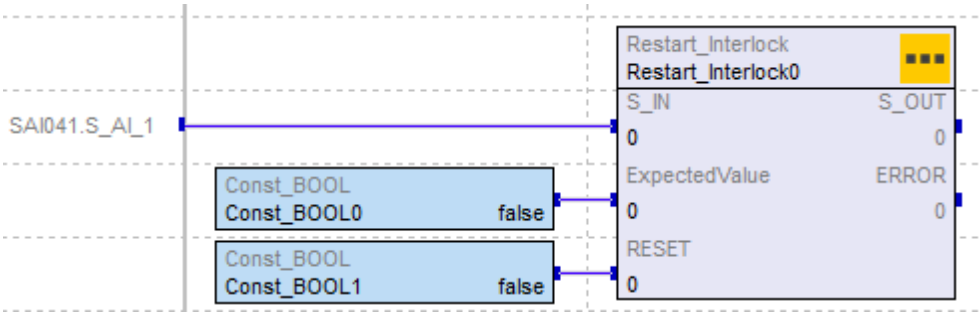

The expected value = FALSE, i.e., no measured value is expected because this input channel is deactivated in the Safety application logic.

The S_IN input is output at the S_OUT output. The ERROR output is set to FALSE

Example 2: Measured value at the input of the SAI041, expected value = TRUE:

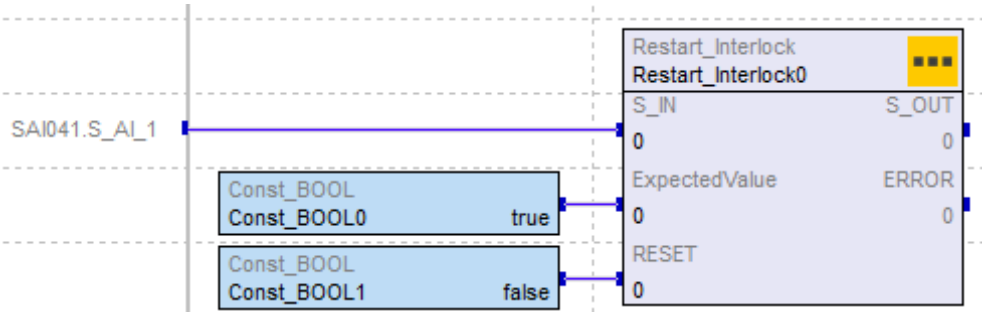

The expected value = TRUE, i.e., a measured value is expected, since this input channel is activated in the Safety application logic (restart interlock deactivated).

The measured value at input SAI041.S_AI_1 is displayed at output S_OUT. The ERROR output is set to FALSE.

Example 3: Error at the input of SAI041, expected value = TRUE:

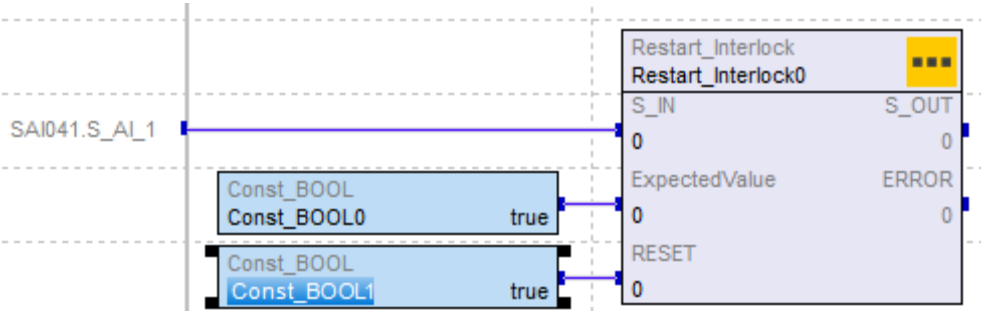

The expected value = TRUE, i.e., a measured value is expected, since this input channel is activated in the safety application logic (restart interlock deactivated).

If an error is present at input SAI041.S_AI_1, the error is displayed at output S_OUT, since in this case an unexpected error, such as a cable break, has occurred. The ERROR output is TRUE. The error is permanently passed on to the output. The ERROR output is TRUE. The error must be acknowledged explicitly via the RESET input. After that the input SAI041.S_AI_1 is displayed again at the output S_OUT. The ERROR output is set to FALSE.

3 Installation and Mounting

3.1 Mounting a Safety Module

The C-DIAS Safety modules must be installed on a C-DIAS module carrier. The supply voltage must be off. S-DIAS modules must be connected to a VARAN communication module (e.g. VI020). The supply voltage must be off.

Further details regarding installation are found in the operation manual of the Safety modules.

3.2 Wiring

The following instructions must also be observed when wiring.

- Safety-related inputs are subject to the standby current principle.
- In the user program, ensure the "0" signal to the components always results in the deactivation of the relevant outputs.
- Neighboring inputs must not be wired to the same test signal
- For wire lengths greater the 200 m and a cross section of 1.5 mm^2 or wire lengths greater than 300 m and a cross section of 2.5 mm^2, a short-circuit to mass remains unnoticed by the operating system.
- For wire lengths over 800 m, the test pulse outputs can be disrupted by switching processes in the 24 VDC signals.
- For wire lengths greater than 500 m, the function of the test signal must be tested by simulating short-circuits between the pulsed inputs.
- The short-circuits between the test pulse outputs and the corresponding input must be excluded with the appropriate wiring.
- Copper should be used as the conductive material.
- The wiring of contact sensors should be checked for cross and short-circuits.
- If the C-DIAS supply voltage comes from the same source as the 24 V supply voltage for the in/outputs, a short-circuit from the external power supply to mass can cause the entire C-DIAS system to fail.
-

Important:
Incorrect wiring can lead to damage of Safety modules. In addition, it cannot be guaranteed that the Safety functions operate correctly if not properly wired.

3.2.1 Wiring Examples and Examples of Creating Configurations

3.2.1.1 Example 1: Relay control

CPU Modulträger CMB 022

CPU

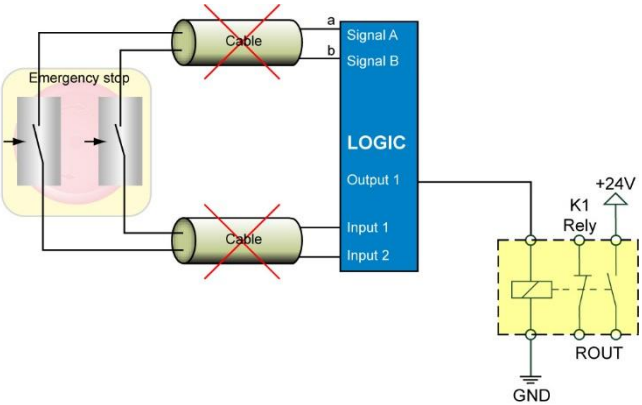

S -1 **Testing of the configuration after installation**

After installing all Safety modules or exchanging a Safety module, the system must be verified through the successive testing of the individual Safety modules. When the activation of all Safety modules is correct and the wiring of these modules is verified through this test, the installation can be released for operation.

S -2 **Wiring the pulse signals**

With the connection of the pulse signal, caution must be taken to ensure that the wires from signal A and Signal B are not placed in a common multi-wire cable.

A separate cable must be provided for each signal wire.

Ensure that the cables are free from cross-circuits.

3.2.1.2 Example 2: Processing Machine

Description

In a processing machine the work piece is held by tension in the clamping jaw. If the tension in the clamping jaw is released, the work piece can be removed. The access area for changing the work piece is protected by a safety door.
When the guard door is opened, the processing machine's drive train must be deactivated within 50 ms. With this method, access during operation is prevented. The guard door is monitored with 2 independent end switches S3 and S4. After the activation of an end switch, the second end switch must activate within 500 ms.
When the emergency stop switch S2 is triggered, the processing machine must be stopped within 50 ms.
The drive train is activated by 2 relay contacts connected in series. The Status of the relays is read with both auxiliary contacts from relays K1 and K2. The activation of relays K1 and K2 is monitored with a time window of 50 ms.
The signal lamp P1 should light when the processing machine's drive train is active.
After an error, the system can only be started or restarted manually with the start button S1.

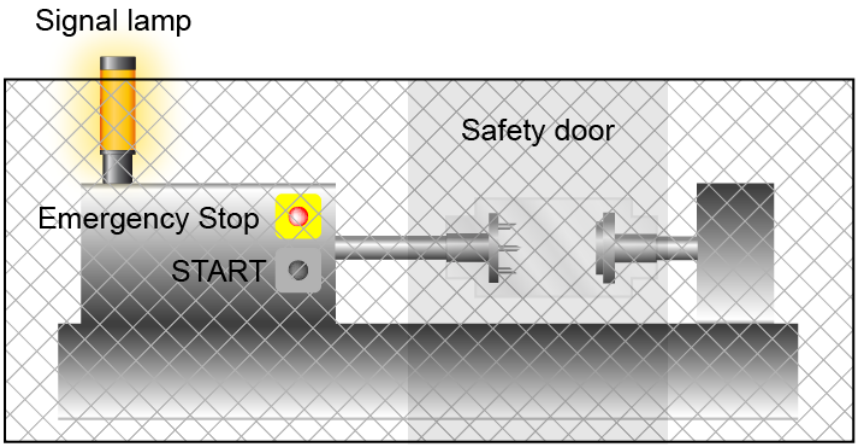

Fig. 18 Schematic diagram of the processing machine

Wiring

The normally open contacts of the start button S1 are connected to the pulse outputs A/B over 2 channels and wired to 2 Safe inputs.
The normally closed contacts of the Emergency Stop switch S2, are connected to the pulse outputs A/B over 2 channels and wired to 2 Safe inputs.
The normally open contacts of the two end switches S3 and S4 for the guard door are connected to the clock outputs A/B over 2 channels and wired to four Safe inputs.

The two coils in relays K1 and K2 are controlled with 2 Safe outputs. The two auxiliary contacts (normally closed) K1 and K2 are used to read the relay contacts. The two operating contacts (normally open) in relay K1 and K2 are connected in series and form a Safe relay output for control of the processing machine's drive train.

The signal lamp P1 is controlled with a Safe output.

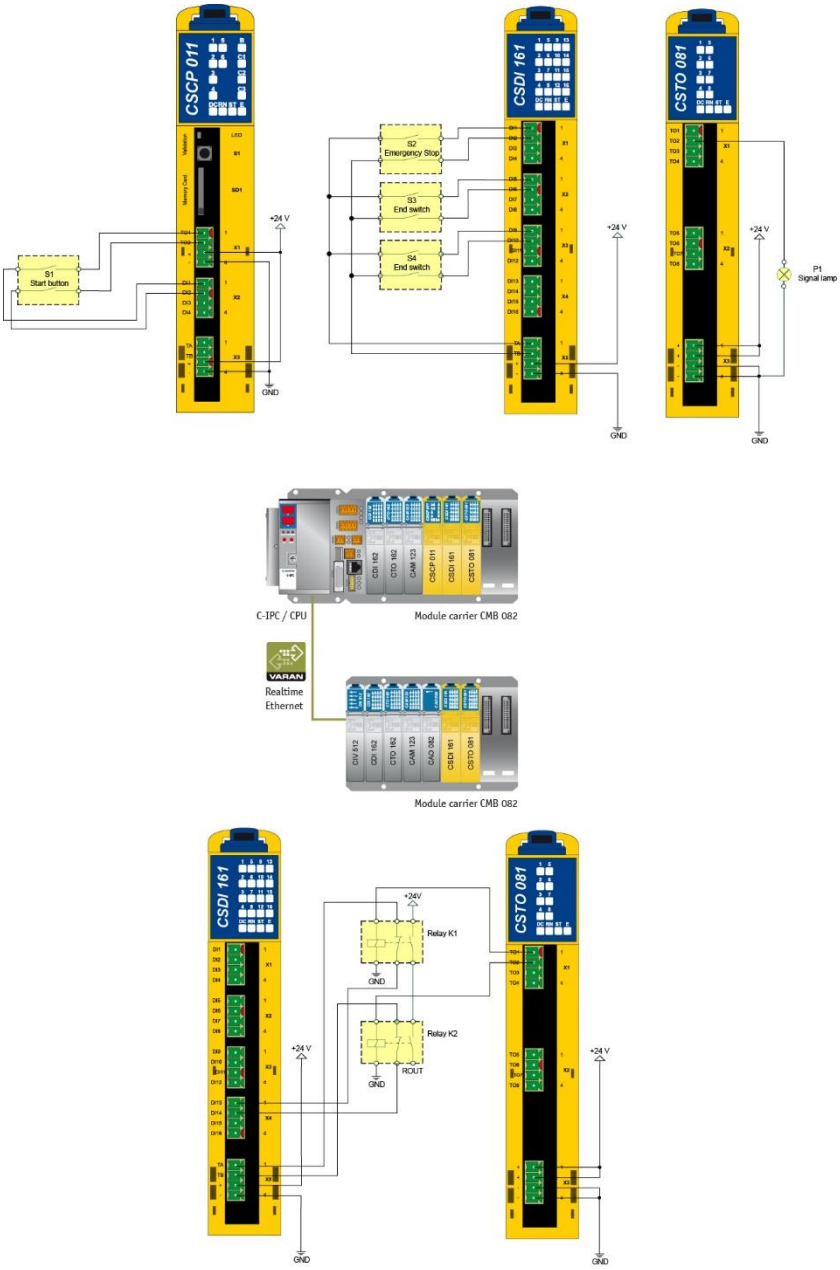

Fig. 19 C-DIAS Hardware configuration

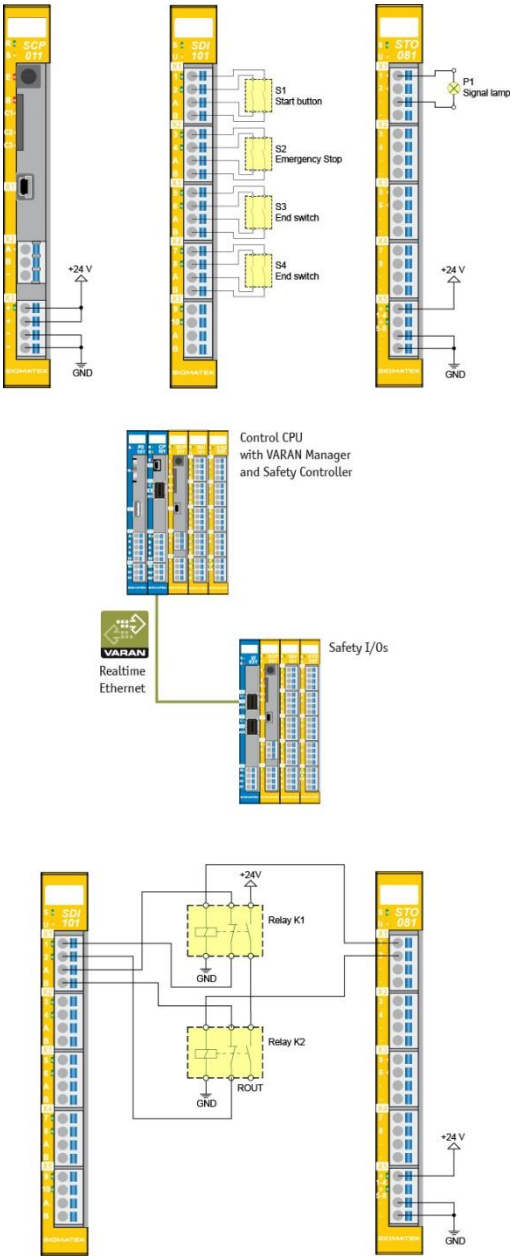

Fig. 20 S-DIAS Hardware configuration

	CSCP 011		CSDI 161		CSTO 081	
	Pin	**Connection**	**Pin**	**Connection**	**Pin**	**Connection**
Central control structure wiring	X1/1	M.C.s	X1/1	Normally closed Emergency Stop S2 (A)	X1/1	P1 signal lamp control
	X1/2	M.C.s	X1/2	Normally closed Emergency Stop S2 (b)	X1/2	M.C.s
	X1/3	+24 V	X1/3	M.C.s	X1/3	M.C.s
	X1/4	GND	X1/4	M.C.s	X1/4	M.C.s
	X2/1	Normally open start button S1 (B)	X2/1	Normally open end switch S3 (A)	X2/1	M.C.s
	X2/2	Normally open start button S1 (B)	X2/2	Normally open end switch S3 (B)	X2/2	M.C.s
	X2/3	M.C.s	X2/3	M.C.s	X2/3	M.C.s
	X2/4	M.C.s	X2/4	M.C.s	X2/4	M.C.s
	X3/1	Signal output A	X3/1	Normally open end switch S4 (A)	X3/1	+24 V
	X3/2	Signal output B	X3/2	Normally open end switch S4 (B)	X3/2	+24 V
	X3/3	+24 V	X3/3	M.C.s	X3/3	GND
	X3/4	GND	X3/4	M.C.s	X3/4	GND
			X4/1	M.C.s		
			X4/2	M.C.s		
			X4/3	M.C.s		
			X4/4	M.C.s		
			X5/1	Signal output A		
			X5/2	Signal output B		
			X5/3	+24 V		
			X5/4	GND		

Table 8 Central Safety module wiring

	CSDI 161		CSTO 081	
	Pin	**Connection**	**Pin**	**Connection**
Decentralized control structure wiring	X1/1	M.C.s	X1/1	M.C.s
	X1/2	M.C.s	X1/2	M.C.s
	X1/3	M.C.s	X1/3	M.C.s
	X1/4	M.C.s	X1/4	M.C.s
	X2/1	M.C.s	X2/1	Control relay K1
	X2/2	M.C.s	X2/2	Control relay K2
	X2/3	M.C.s	X2/3	M.C.s
	X2/4	M.C.s	X2/4	M.C.s
	X3/1	M.C.s	X3/1	+24 V
	X3/2	M.C.s	X3/2	+24 V
	X3/3	M.C.s	X3/3	GND
	X3/4	M.C.s	X3/4	GND
	X4/1	Normally closed relay K1 (A)		
	X4/2	Normally closed relay K2 (B)		
	X4/3	M.C.s		
	X4/4	M.C.s		
	X5/1	Signal output A		
	X5/2	Signal output B		
	X5/3	+24 V		
	X5/4	GND		

Table 9 Decentralized Safety module wiring

Configuration

The Safety modules used are first placed in the hardware tree of the SAFETYDesigner. The appropriate hardware tree for this example project is show in
Fig. **21**.

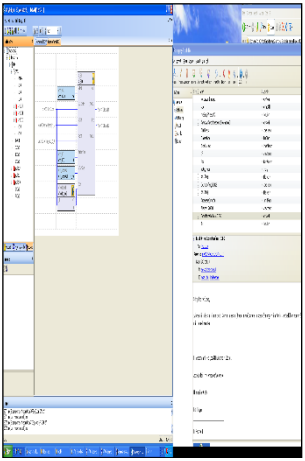

Fig. 21 Hardware tree for example project 2

The configuration in this example project is implemented as follows:
The start buttons S1_A and S1_B, which are connected to the Safety CPU, are connected to one another with an AND gate. The result is recorded in a Safe temporary variable (start signal). The configuration of the start button S1_A is shown in
Fig. **22**. Thereby, the cross-circuit detection (in A) is activated. Similarly, the start button S1_B is configured with signal B.

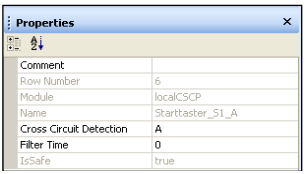

Properties

Comment	
Row Number	6
Module	localCSCP
Name	Starttaster_S1_A
Cross Circuit Detection	A
Filter Time	0
IsSafe	true

Fig. 22 Configuration of the start button S1_A

Switches S2, S3 and S4 are configured the same as the start switch S1. The Emergency Stop function was implemented with the SF_EmergencyStop function block. With help from the start signal, which is converted from a Safe signal to Boolean signal with the Safebool to Bool function block, the SF_EmergencyStop function block is reset. The unused Safe inputs in this function block are deactivated with a Safe constant.

With the SF_GuardMonitoring function block, the 500 ms delay is implemented when switching from S3 or S4 of the other corresponding switch. Thereby the input discrepancy is connected to a constant of 500 ms. The reset function is secured as with the start signal. The result of the two complex function blocks are stored in the two temporary variables Emergency and GuardLockingState then connected with an AND gate. The result of the AND gate is sent to the Safe output of the local output module to the connected signal lamp.

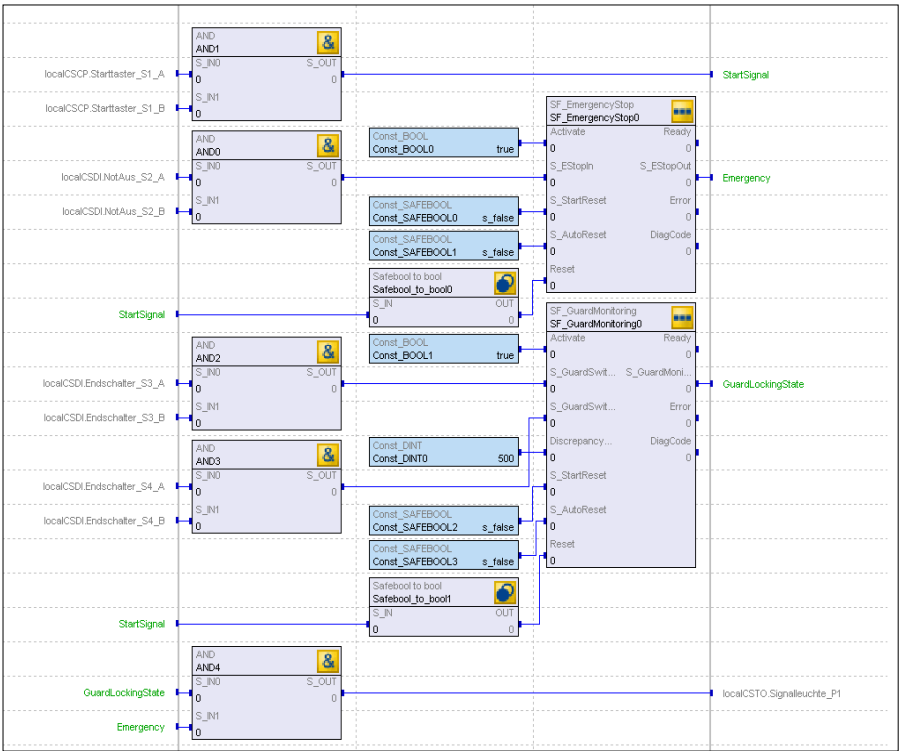

Fig. 23 Local Safe CPU network

The output SignalLight_P1 is reset by a second network and controls the complex function block SF_EDM. The two series relays are read back to the S_EDM1 and S_EDM2 inputs and monitored in a 50 ms time window. This is implemented with a constant that must be configured with a value of 50 ms.

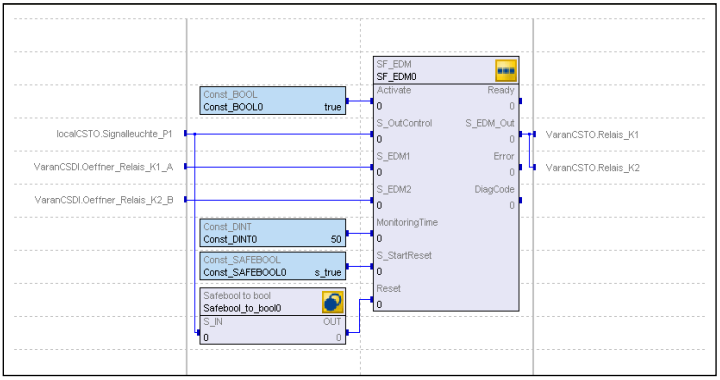

Fig. 24 Network 2

3.2.1.3 Example 3: Two-hand Switch

In this example, decentralized wiring is shown. In the safe inputs DI1 & DI2 of the CSDI 161 safe input module, a two-hand switch is connected that is powered by the pulse outputs of the input module. Among other things, cross-circuit detection between the Safe inputs can be thereby configured. The Safe input module is connected to Safety CPU over a bus system, e.g. C-CDIAS and VARAN. The Safety application is processed in the Safety CPU. This means that the inputs from the Safe input modules are read and sent to the Safe CPU. The Safety CPU the processes the Safe inputs. In this example, the result of the Safe application is sent to a remote output module. This then switches the actuator of a for example, on or off.

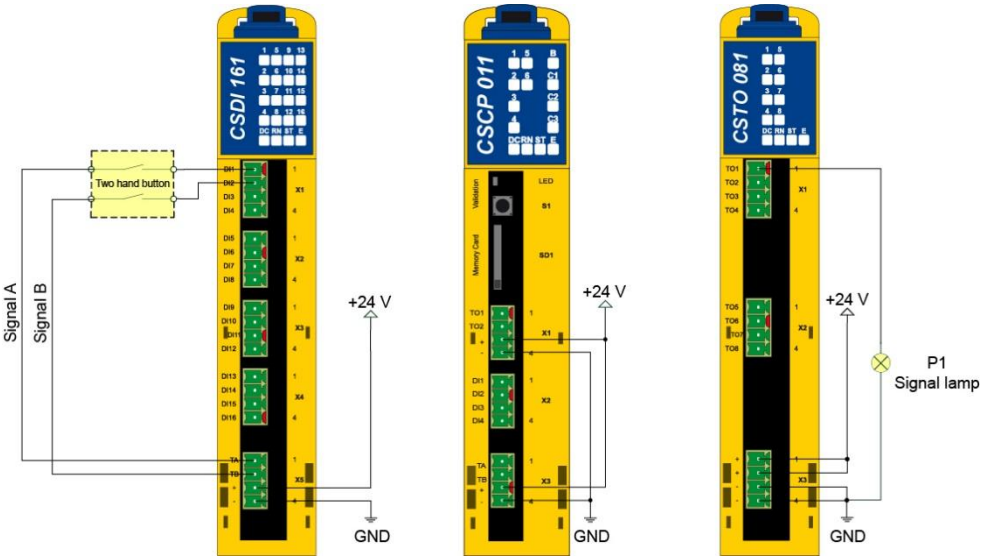

Fig. 25 C-DIAS Hardware configuration of example 3

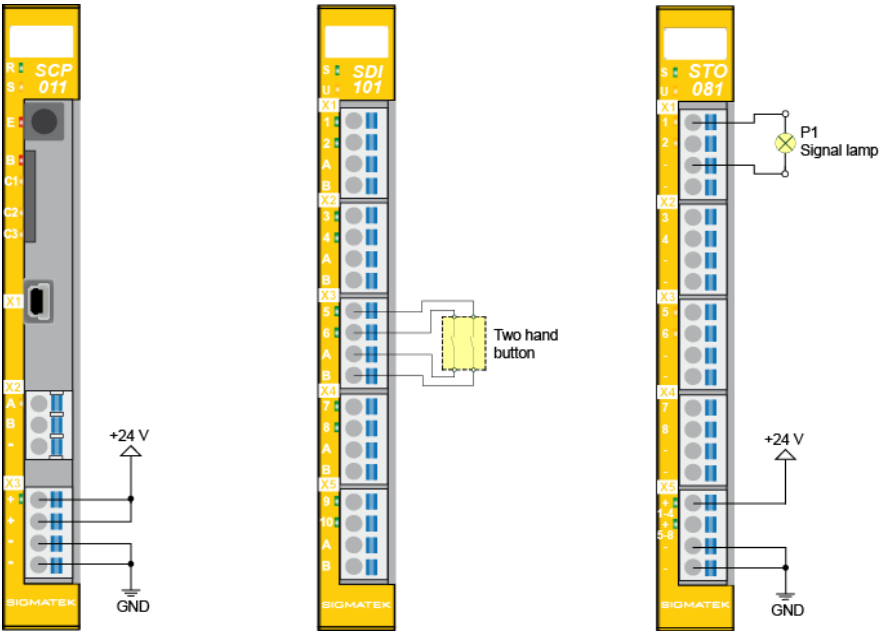

Fig. 26 S-DIAS Hardware configuration of example 3

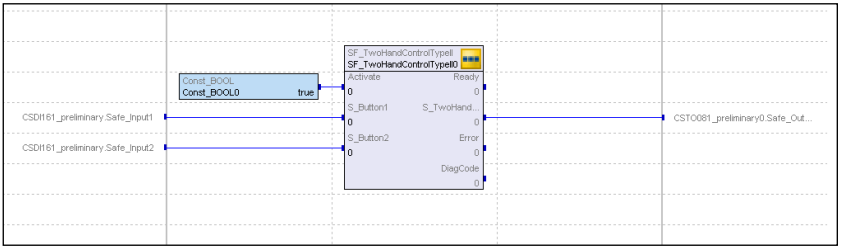

Fig. 27 Optional safety applications

3.2.1.4 Example 4: Mutinglampe

With a Safe output from a Safety module, a Safety CPU for example, can control a muting lamp.

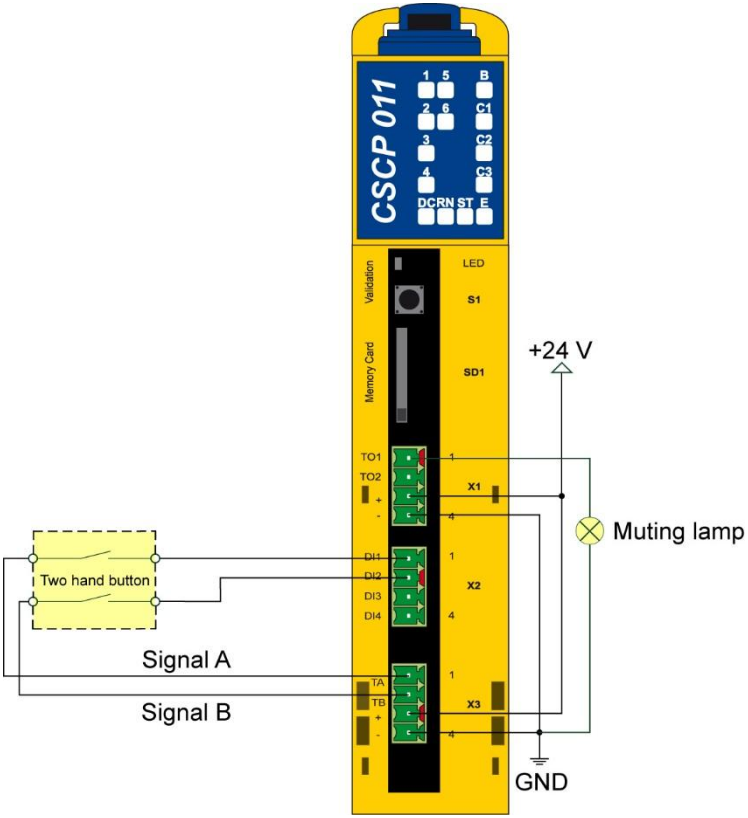

Fig. 28 C-DIAS Muting lamp control

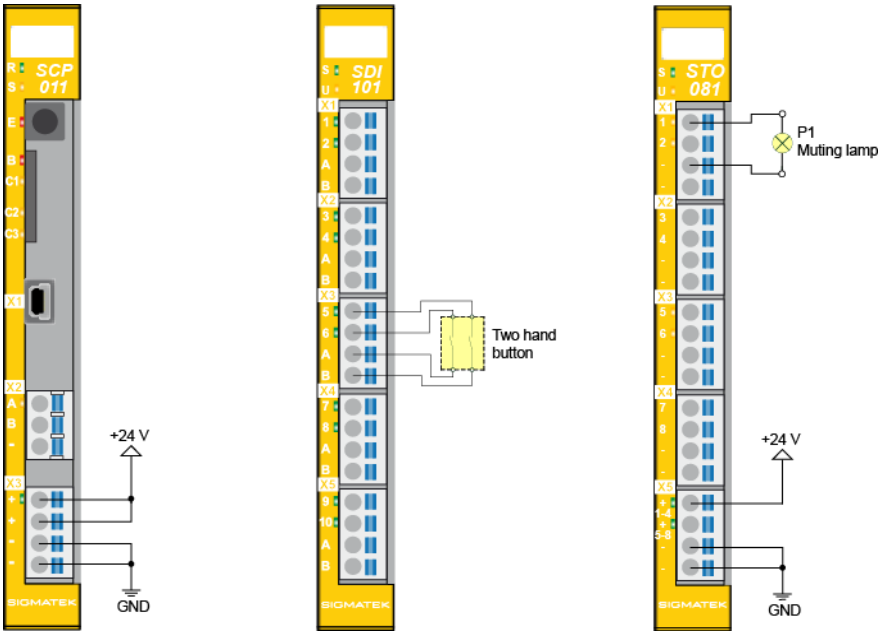

Fig. 29 S-DIAS Muting lamp control

3.2.1.5 Example 5: Optional Modules (starting with Revision 2)

In this example, the use of an optional module is explained. A Safe input in a CSDI 162 optional input module is used by CSCP 012 Safety CPU.

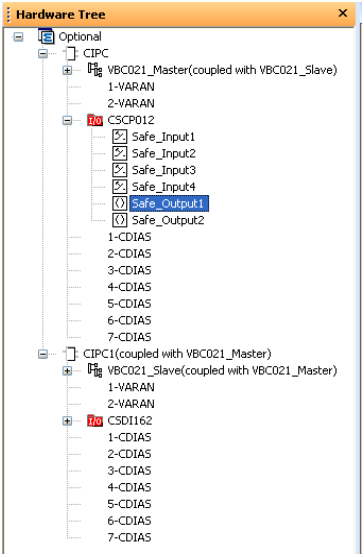

Fig. 30 Possible hardware configuration

The safety application is processed in the Safety CPU, which means that the input is read from the input module and sent to the Safety CPU. The Safety CPU the processes the Safe inputs.

Since the input module is optional, it does not have to be available. This means that no input is sent to the Safety CPU. In the safety application for the Safety CPU, processing the optional input must be controlled through the function blocks SF_Optional_Pwd and SF_Optional_Switch. In the SF_Optional_PWD function block, a password is entered to set whether an optional input of a module is used. In the SF_Optional_Switch function block, either the value of the input or a user-defined default value is switched. This is performed in conjunction with a password functions block.

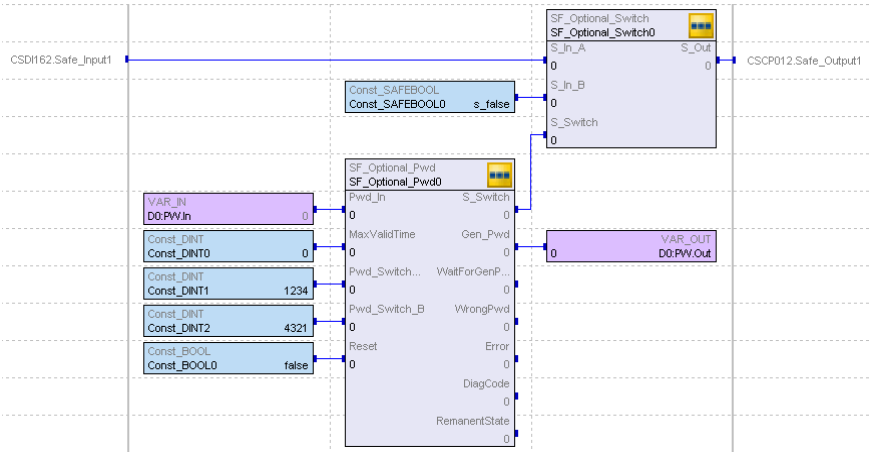

Fig. 31 Optional safety applications

3.2.1.6 Example 6: Interfaces (starting from Revision 2)

In this example, the use of reading and writing interfaces is explained. Interfaces are variables over which individual projects communicate with one another (Safety CPUs in different Safety projects). This means that a Safety CPU writes data, which is then read by another CPU. A writing interface is provided by a CSCP 012_1 Safety CPU in VARAN system 1. This interface is used a reading interface by a second CSCP 012_2 Safety CPU in VARAN system 2. Both Safety CPUs are positioned on the bus master and are placed in two independent VARAN systems. The VARAN systems are connected through a VBC 021 interface module. The writing interface is created in the Safety project of VARAN system 1 and set as the output in the CSCP 012_1 Safety CPU network. In the PLC application of VARAN system 1, the interface is written in the VBC 021 module. In the PLC application of VARAN system 2, the interface is read from the VBC 021 module.

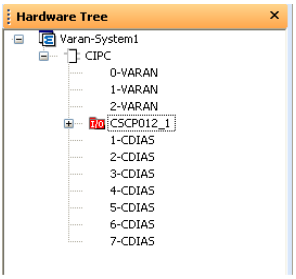

Fig. 32 Possible hardware configuration of VARAN system 1

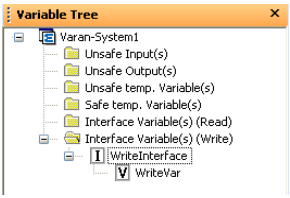

Fig. 33 possible interface (write)

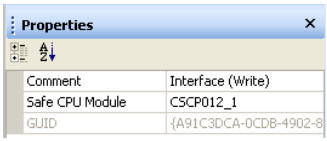

Fig. 34 possible settings

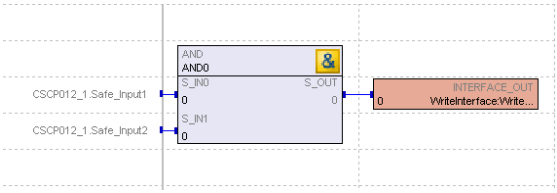

Fig. 35 possible safety application VARAN system 1

The exported writing interface is imported into the Safety project of VARAN system 1 and used as a reading interface in network of the CSCP 012_2 Safety CPU.

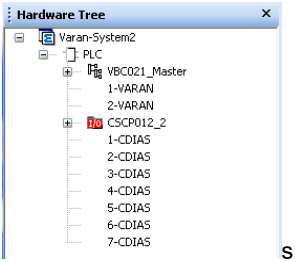

Fig. 36 Possible hardware configuration of VARAN system 2

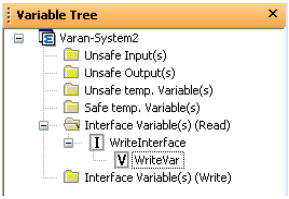

Fig. 37 Possible interface (read)

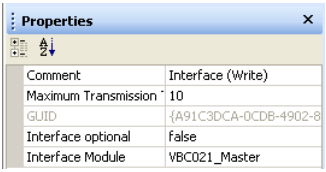

Fig. 38 Possible settings

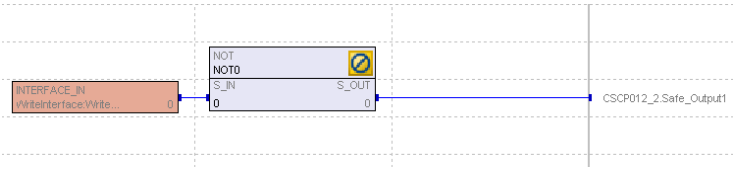

Fig. 39 Possible safety application VARAN system 2

The VBC 021 interface module must be placed in both LASAL Class 2 projects. To load the interfaces, memory must be reserved in the instances of the interface module (see description of hardware classes in LASAL Class 2).

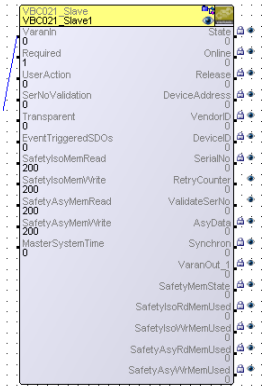

Fig. 40 Memory setting options (VARAN system 1)

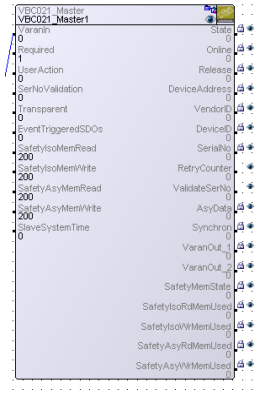

Fig. 41 Memory setting options (VARAN system 2)

3.2.1.7 Example 7: Contact expansion

With the save contact expansion, the user can expand a safe electronic output with several potential-free contacts. The contact expansion is used where ever potential-free switches are needed or the current of the safe electronic output is insufficient.

Simple error-free output

Image 35 shows an example of a contact expanded by 2 redundant relays with mass-based (Ext. GND) control through a safe output TO1. The relay must have force guided contacts (example: 3 normally open, 1 normally closed), by which the normally closed contact is used to read back the switching state (cross circuit detection); the normally closed contact is connected to a side of the TA, which is read by a safe input DI1 on the other side. If the contact expansion is located in a control cabinet and/or the connections wires are protected, errors through third party supply connections can be eliminated so that the circuit complies with the requirements of Category 3 / 4 and PL d/e in accordance with EN ISO 13849-1 and SILCL 2 / 3 in compliance with EN 62061.

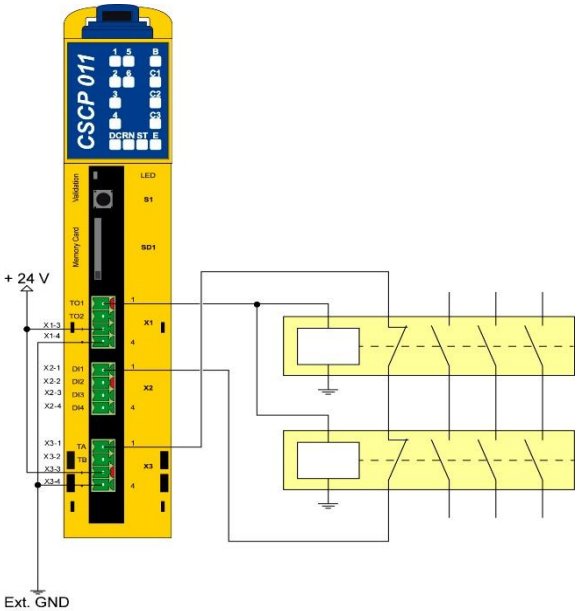

Fig. 42 Simple error-free output

Two-channel output

In contrast, image 2 shows an example of a 2-channel contact expansion that complies with Category 4 and PL e in compliance with EN ISO 13849-1 and SILCL 3 in accordance with EN 62061. Each relay is connected to a safe output SO1 and SO2 and has their own back-read circuit using the signals TA and TB, which are read through two safe inputs SI1 and SI2 (cross-circuit detection). The relays must also be force guided contacts.

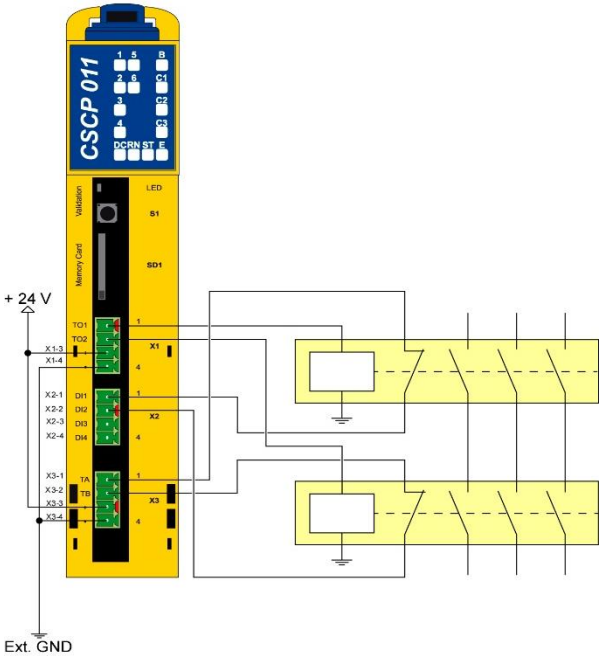

Fig. 43 Two-channel output

4 Initial Start-up and Configuration

4.1 Creating the Standard Control Project

The Safety components are implemented in a LASAL project in the same way as standard C-DIAS components. Thereby, a hardware class is provided for each Safety module. Each Safety module with Safe outputs has an "Unsafe Output" variable for each Safe output. This variable can be controlled by the standard PLC. If this variable is used, it must be configured in the SAFETYDesigner. The unsafe release variable is thereby linked to the corresponding safe output with an AND gate; this means if the Safe application sets the Safe output, it can still be deactivated by the standard PLC. This variable can however, reactivate an inactive Safe output.

After the Safety modules have been placed in the LASAL environment and wired accordingly, the standard application must be validated; this means testing whether all modules are located when Online with the standard PLC.

4.2 Creating the Safe Application with the SAFETYDesigner

4.2.1 Creating the Configuration

When creating the configuration, the hardware tree can be read online or constructed manually in the SAFETYDesigner. Or read from a file created in LASAL Class 2. To go online, the IP address of the standard PLC is required. To go on line with an S-DIAS Safety module in stand-alone mode, the COM interface to which the module is connected is required. To construct the Safe application, standard logic blocks and complex function blocks similar to PLC-Open are available. Creating the configuration is described in the LASAL SAFETYDesigner.

When creating the configuration, the following points must be observed:

- A Safe output can only be set with one signal
- A Safe input can be used multiple times.
- The Safety module used in a project cannot be used in another project simultaneously. If the Safety modules from another project are used in the configuration, the corresponding Safety modules are reconfigured during distribution of the configuration data.
- Correct wiring and configuration are especially important for the Safe inputs (2-channel, cross-circuit detection etc.).

4.2.2 System Configuration

After creating the configuration, the Safety Designer must be placed online to load the configuration to the appropriate Safety CPU(s). For this purpose, the Safety CPU must be changed to the service mode. To change to the service mode, the appropriate password must be entered. If now password is assigned, one must first be defined.

☞	**Important:** With the initial start-up, no password is yet assigned for the CPU (delivery condition of the Safety CPU: without password). The user must set a password in the Safety CPU. In online mode, the "Change Password" button must be pushed. With the Change Password dialog, the new password can be set in the Safety CPU. The input field for the old password remains empty, the input fields for the new password and its confirmation must be filled in (length of the password is 6-8 characters).

If the switch to the service mode is successful, the configuration can be loaded into the Safety CPU with the "Download" button. If the online connection is terminated during the download, the configuration in the Safety CPU is invalid and the Safe outputs remain in Safe status. The download must be repeated after the online connection is reestablished.

After downloading, the "Start" button must be pressed. The configuration is now distributed to the remote Safety modules, if available (operating mode Check Config). After the configuration has been distributed, the system changes to the time-restricted runtime mode. The maximum time, in which the mode is stopped, can be configured up to 8 hours. If the time span is exceeded, the system changes to the error mode and the Safe outputs are deactivated.

The purpose of the time-restricted runtime mode is to give the user the option of validating the Safety system. Whether the Safety system behaves as expected must be tested during the validation. The validation consists, among other things, of following points:

- ***Checking the wiring***
  Here, whether all in- and outputs are wired as configured must be checked. With the Safe inputs, it is especially important to ensure that the inputs are supplied with the correct signals.

- ***Function tests***
  The reaction must be checked with each switching process of the Safe inputs. With activation of an Emergency Stop at the input, for example, a specific output must therefore be deactivated within the configured reaction time. All switching processes in the Safety system and their reaction times must be simulated and tested using this method.

If the Validation was successful, it is then possible to change to the unlimited runtime mode with the "Set Verified" command.

Important:
When validating the Safety system, all Safety functions must be tested for correct operation.

When optional Safety modules are exchanged, the system must be re-configured and validated. This can be done either through the SAFETYDesigner or with the SD card.
If this re-validation does not take place, the SCP loses its configuration and switches to an error state (ERRVAL 222 / 1222 Temporary Operation Time – see chapter 2.6.4). This is a safety measure for unauthorized modules in our Safety system.

4.3 Configuration using the SD Card

4.3.1 Writing to the SD Card

When writing to the SD card, the active SAFETYDesigner project is stored on the SD card. This can only be done with help from the SAFETYDesigner. The following steps are required in order to write to the SD card:

4.3.1.1 Change to the Service Mode

After the service mode is enabled through the SAFETYDesigner, the SD card can be inserted into the Safety CPU.

	Important: The SD card cannot be inserted into the Safety CPU during normal operation (Operational or temporary operational mode). If this occurs, the Safety CPU changes to the error mode (error message 88 or 1088). If this error is triggered, the SD card must be removed and the "Quit Error" command sent. After correcting the error, the service mode can be enabled and the SD card inserted.

4.3.1.2 Writing to the SD Card

In the service mode, the "Write SD-Card" instruction is triggered in the SAFETYDesigner. With this instruction, the open project in the SAFETYDesigner can be loaded into the Safety CPU.

4.3.1.3 Returning to the Normal Operating Mode

After writing to the SD card, it can be removed from the Safe CPU and the operational or temporary operational mode can be restarted.

	Important: If the configuration on the SD card is the same as that in the Flash of the respective Safety CPU, the operational mode can be started with the SD card inserted. If the configuration on the SD card is different from that in the Flash of the respective Safety CPU, the system changes to the error mode instead of the operational mode (error message 87 or 1087). If this error is triggered, the SD card must be removed and the "Quit Error" command sent.

4.3.2 Configuring a Safety CPU with the SD Card

To load the configuration from an SD card to the Flash memory of a Safety CPU, the following steps must be taken:

4.3.2.1 Deleting the Configuration from the Flash Memory of the Safety CPU

To load the configuration from the SD card, the configuration in the Safety CPU must first be deleted. This can be done either with the SAFETYDesigner (log into the service mode and run the "Clear" command) or with the validation button on the Safety CPU. Once the configuration in the Safety CPU is deleted, the Safety CPU can no longer return to the operational or temporary operational mode. The Safety CPU remains in the service mode.

4.3.2.2 Insert the SD card and Deactivate the System

In the next step the system is shut down. Next, the SD card containing the valid configuration must be inserted into the Safety CPU.

4.3.2.3 Start the System with the SD Card

When the system is restarted, the configuration is loaded from the SD card into the Flash memory of the Safety CPU. This is only possible if a valid configuration is stored on the SD card.

	Important: If the SD card has an incorrect format (error message 86 or 1086) or the Safety CPU's Flash memory has not been cleared (error message 87 or 1087), the Safety CPU goes into the error mode. In this case, the SD card must be rewritten. The error can be corrected by removing the SD card and canceling the error with the "Quit Error" function. If the configuration does not match the available real modules, the distribution process of the configuration triggers an error (error message 9 or 1009) and the Safety CPU also goes into safe mode. In this case, the configuration must be checked. This means ensuring that all required Safety modules are available, not in error mode and the standard communication with these safety modules is intact.

4.4 Configuration of a Safe Input

4.4.1 Structure of a Safe Digital Input

Image 43 shows the structure of the Safe input circuit:

The input is protected against over voltage according to IEC 61131-2, Type 1 and has a constant input delay time.

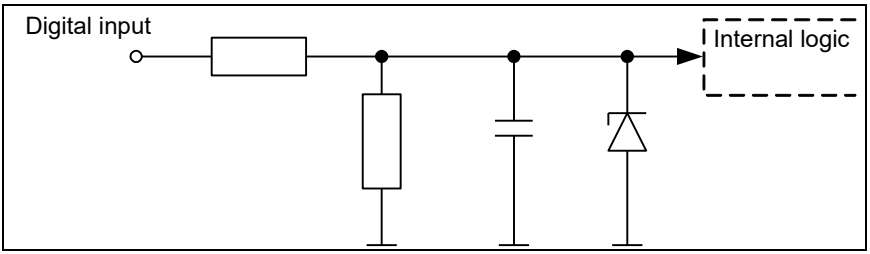

Fig. 44 Structure of a digital input

The digital input signal is reduced to a lower potential through a voltage divider. Voltage dividers and capacitors delay the input signal, which must be included in the calculation of the reaction time. The Zener diode protects the internal logic from over voltages.

The time delay, with which a change in the input signal can be detected, is a maximum of 2.5 ms. An additional filter time can be included with help from the SAFETYDesigner.

4.4.2 Configuration of a Safe Input

Each Safe input has the following configuration properties:

- Maximum Transmission Time (not Revision 4)
- Filter Time (Revision 1 and starting from Revision 3)
- Cross Circuit Detection

These properties can be set using the LASAL SAFETYDesigner. By clicking on an input, these properties can be assigned in the "Properties" field of the SAFETYDesigner. The values are defined as follows:

4.4.2.1 Maximum Transmission Time

This is the time in which an input must be updated after being read. The time is specified by the bus clock frequency setting. A maximum transmission time of 10 ms is set in the SAFETYDesigner by default (Revision 1). Starting with the Revision 2, the time is determined and entered when the module is added. It is assumed that the standard bus operates in milliseconds. The maximum transmission time can be set between 1 ms and 100 ms.

4.4.2.2 Maximum Transmission Time (Output as Input)

This is the time in which a back-reading output must be updated. The time is specified by the bus clock frequency setting. A maximum transmission time of 10 ms (Revision 1) is set in the SAFETYDesigner by default. Starting with Revision 2, the time is determined and entered when the module is added. It is assumed that the standard bus operates in milliseconds. The maximum transmission time of back-reading outputs can be set between 1 ms and 100 ms.

4.4.2.3 Filter Time (Revision 1 und ab Revision 3)

This is the software filter, which can also be set between 1 ms and 100 ms. The software filter is especially helpful to better suppress noise in the input signal.

4.4.2.4 Cross Circuit Detection

If a cross-circuit is detected, the Safe inputs must be supplied with the output signals from the respective Safety module. Here, one of the inputs must be connected to signal A and the second connected to signal B. In the SAFETYDesigner, the wiring must also be configured in the "Cross Circuit Detection" field. If the cross-circuit detection is activated, the reaction time changes.

	Important: The maximum transmission time, the filter time and the cross-circuit detection influence the system reaction time directly (see chapter 4.8)

4.4.3 Example Wiring of a Safe Input

4.4.3.1 1-Channel Read with Supply Signal and Cross-Circuit Detection

The C-DIAS and S-DIAS safety system supports single-channel reading of a sensor. The sensor must be connected to the clock supply of clock A or clock B of the corresponding safety module. The output of the sensor, which is supplied with clock output A or B and is to be wired to a safe input, must be configured on the corresponding safety module. This can be set via the LASAL-SAFETYDesigner. Input 1 - in the following example in the cross circuit detection field - must be configured with clock pulse A. Further information can be found in the description of the LASAL SAFETYDesigner.

The clock outputs are switched off every 26 seconds for a maximum of 4 ms.

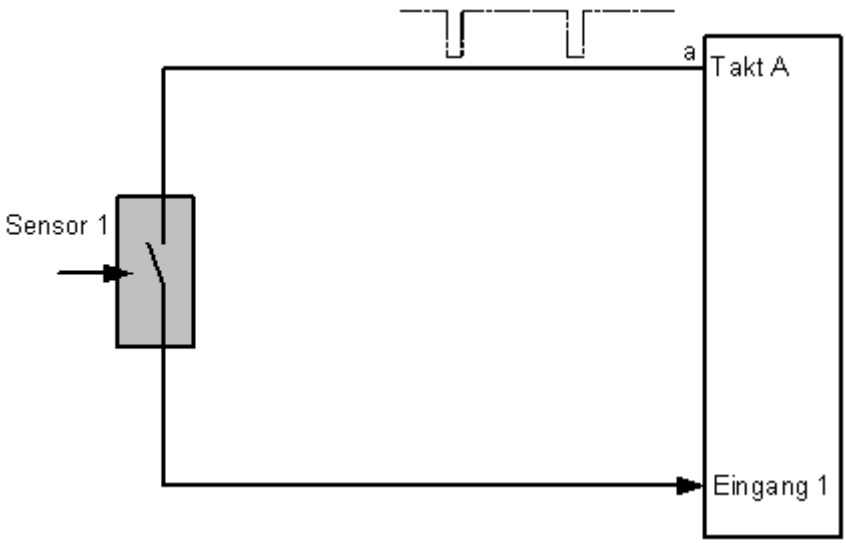

Fig. 45 Single channel reading of an input

In SAFETYDesigner, this example is structured as follows:

Fig. 46 Network of a single-channel control system

The inputs are configured as follows:

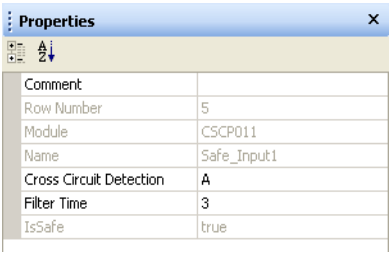

Properties

Comment	
Row Number	5
Module	CSCP011
Name	Safe_Input1
Cross Circuit Detection	A
Filter Time	3
IsSafe	true

Fig. 47 Configuration of the safe inputs

If single-channel wiring is used, the following faults can be detected:

- Clock pulse could not be detected – Error code 102 or 1102
  If the safe input to be tested is wired in such a way that it is "High" and the clock pulse cannot be detected, there may be a cross circuit with the supply or the clock output is defective. In this case, the wiring must be checked by the user. If the wiring is correct, the corresponding clock output must be re-measured.

- Incorrect clock pulse is detected – Error code 103 or 1103
  If the wrong clock pulse is detected at a safe input when performing the external input test, this is detected. Possible causes are cross-connections or incorrect wiring.

	IMPORTANT! If the clock outputs are used for wiring, the safe application must be configured accordingly!

	IMPORTANT! If the clock output is defective, so that it always outputs only the low state, this cannot be detected! If, on the other hand, the high state can no longer be switched off, this is detected via clock pulses!

In this example, it should also be ensured that the reaction time is extended by the test of the cross-wire short detection. The extension of the reaction time is 6 ms.

4.4.3.2 1-Channel Read without Supply Signal and Cross-Circuit Detection

If a sensor is connected to a Safe input over one channel, the following must be observed during the configuration:

	Important: • The sensor cannot be supplied by the clock signal, as the pulse signal can affect the Safe application. • In the SAFETYDesigner, the cross-circuit detection or the single-channel input must be set to "0".

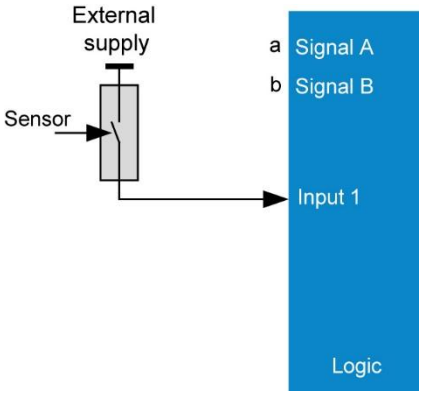

Fig. 48 Single-channel reading of an input

4.4.3.3 2-Channel Read with Supply Signal and Cross-Circuit Detection

The C-DIAS and S-DIAS safety system supports two-channel input from a sensor, e.g. a two-channel Emergency Stop button. A connection from sensor 1 to the supply signal of pulse A and another from sensor 2 to that of pulse B of the respective Safety module. The sensor output supplied by the output signal from A, which should be connected to a Safe input, must be configured in the corresponding Safety module. This is set in the LASAL SAFETYDesigner. Thereby input 1 - in the Cross Circuit Detection field in following example - must be configured with signal A and input 2 with signal B. With this method, whether the outputs are crossed is tested automatically. Further information can be found in the LASAL SAFETYDesigner.

The two pulse outputs are deactivated at different times every 26 seconds for a maximum of 4 ms.

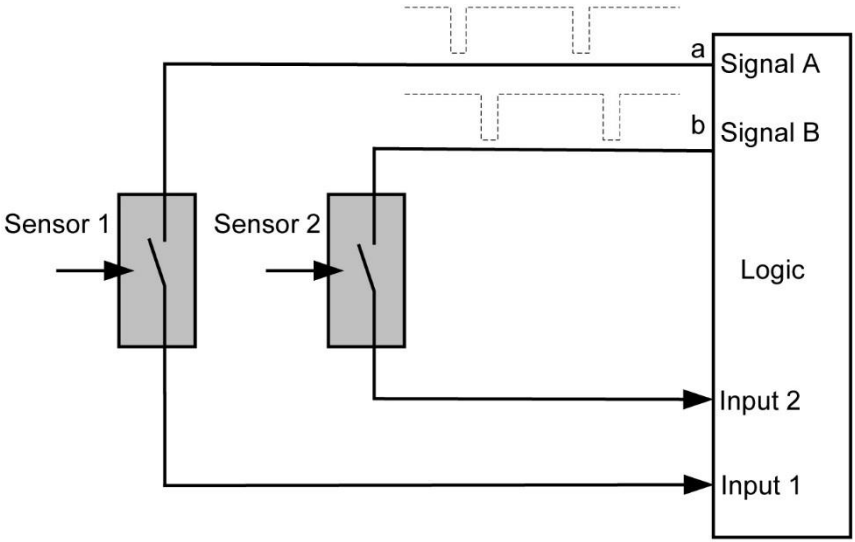

Fig. 49 2-chanel reading of an input

In the SAFETYDesigner, this example is constructed as follows:

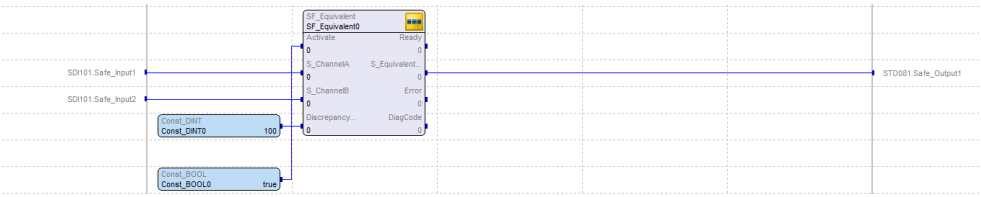

Fig. 50 2-channel control network

The inputs are configured as follows:

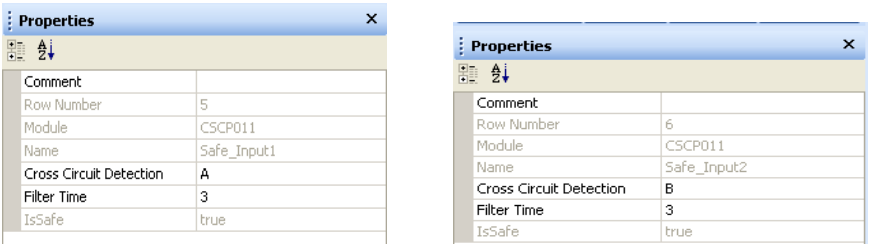

Properties

Comment	
Row Number	5
Module	CSCP011
Name	Safe_Input1
Cross Circuit Detection	A
Filter Time	3
IsSafe	true

Properties

Comment	
Row Number	6
Module	CSCP011
Name	Safe_Input2
Cross Circuit Detection	B
Filter Time	3
IsSafe	true

Fig. 51 Configuration of the Safe inputs

If 2-channel wiring is used, the following errors can be detected.

- Signal could not be detected - error code 102 or 1102
  If the Safe input to be tested is wired so that its "high" and the signal cannot be detected, there is possibly a cross-circuit or the pulse output is defective. The user should check the wiring. If the wiring is correct, the respective pulse output should be measured.

- Wrong signal was detected - error code 103 of 1103
  If during the external input test, the wrong signal is detected at a Safety input, this will be detected. Possible causes are either cross-circuits or incorrect wiring.

	Important: If the pulse outputs are used for wiring, the Safe application must be configured accordingly!

	Important: If the signal output is defective so that it is always low, it cannot be detected! If however, the high status can no longer be turned off, it will be recognized by the pulse signal!

In this example, the reaction time must be extended to test the cross-circuit detection. The reaction time extension is 6 ms.

4.4.3.4 2-Channel reading

2-channel reading with cross-circuit detection is also possible without having to extend the reaction time to that of the input test. In this case, the affected Safe outputs must be connected locally with an equivalence gate. The signal resulting from the equivalence connection must be reconfigured in the SAFETYDesigner; this means the parameters of the

- Cross Circuit Detection
- ➢
- Maximum Transmission Time
- ➢
- Filter Time (Revision 1 and starting with Revision 3)

must be defined.

	Important: The maximum transmission time must be reconfigured for the new signal produced by the equivalence connection!

4.4.3.5 Monitoring of contact-based sensors using the Emergency stop example

When monitoring contact-based 2-channel sensors (see 2-channel Read with Supply Signal and Cross-Circuit Detection) like an Emergency stop for example, the problem is that also the contacts of the sensor must be checked for an error. Figure 49 shows how this can be achieved with an Emergency stop.

The two safety-related inputs of the Emergency stop are connected to an equivalence function (SF_Equivalent), whose output controls the function block for the Emergency stop (SF_EmergencyStop). Using the equivalence function ensures that a defective sensor is detected. More details on the function blocks can be found in the Safety designer.

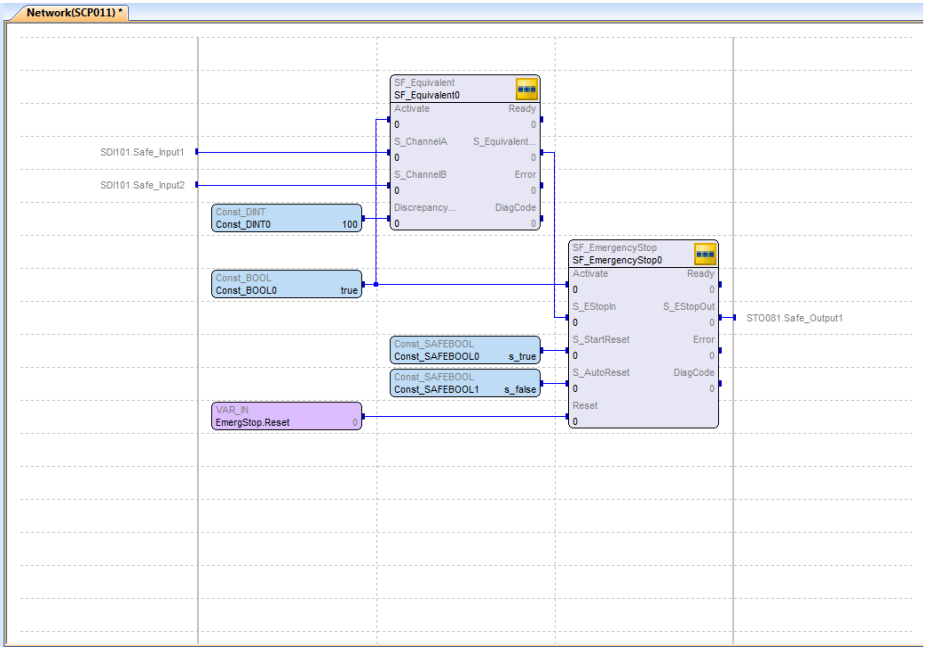

Fig. 52 Circuit of an Emergency stop function

4.4.3.6 OSSD Signals on SIGMATEK Safety PLC Inputs

Devices with OSSD outputs (e.g. light curtains), which have their own test pulses for their outputs, only work in combination with modules with a configurable SW input filter, depending on the test pulse duration. This can be configured in the Safety Designer.

OSSD outputs cause test pulses, which can cause the inputs to drop out and thus lead to a Safety error if no SW input filter is activated and if cross circuit detection is activated.
The cross circuit detection must be deactivated, because in this case the pulse outputs A/B are not used. With the SW input filter the externally generated OSSD output test pulses can be suppressed so that the input signals are correctly evaluated.

- CSCP011 & CSDI161
  - ➢ These have a SW input filter, which can be configured by the customer
- This resulted in the CSCP012 & CSDI162
  - ➢ These have no SW input filter, which can be configured
- Also the SCP010 & SDI100 were developed without SW input filter
  - ➢ These have no SW input filter, which can be configured
- SCP011 and SCP111 with SDI101 and SDM081: these have a SW input filter

Example:

A safety switch with two-channel OSSD output with test pulses of 500 µs is used. The SDI101 has an HW-side input delay of max. 500 µs and this can vary up to 20%. This does not guarantee that the test pulses are filtered. So an additional SW input filter must be used. Since the device is connected with two channels, the cross-wire detection must be switched off in the Safety Designer.

Attention: Pulse outputs A/B are not used in this connection variant. So wiring faults cannot be detected. The user must take suitable measures to detect wiring faults.

Attention: Depending on the setting of the SW input filter, an adjustment of the discrepancy time may also be necessary.

4.5 Configuration of a Safe Output

4.5.1 Structure of a Safe Digital Output

The following diagram shows the structure the Safe output circuit:

The output is protected against over voltage according to IEC 61131-2 and has a defined output delay time (less than 1 ms). When the system is started or if an error occurs, the Safe outputs are always deactivated. If one of the two output drivers is destroyed, the output can still be disabled by the functional output driver. To guarantee safe deactivation, an active output is tested to check whether it can be shut down or not (see the hardware documentation for the turn-off time). Here, 2-channel wiring required, as this is implemented in the module.

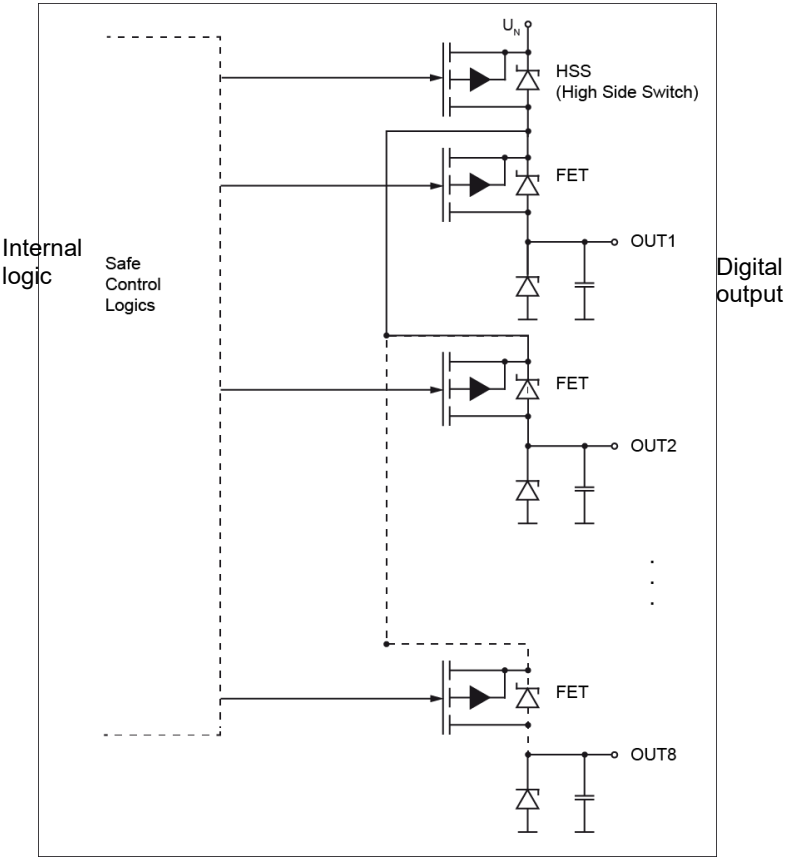

Fig. 53 Schematic output circuit

4.5.2 Configuration of a Safe Output

In a Safe output, "Enable signal used" can be changed from the default setting "false" to "true". This means that the safe output can be deactivated by an unsafe signal from the standard control regardless of the Safe application. The Safe output can only be activated by the unsafe release signal if it was also activated by the Safe application.

If this involves a Safe output of an output module, a maximum transmission time must be entered in the Safe input. The maximum transmission time in this case, defines the maximum transmission time from the Safety CPU to the respective output. This parameter again depends mainly on the bus system and its clock rate.

A Safe output can only be activated in the temporary operational or operational mode. In all other operation modes, the outputs are always off and therefore in safe status.

4.5.3 Using Unsafe Release Signals

The use of unsafe release signals is illustrated in Fig. **54**.

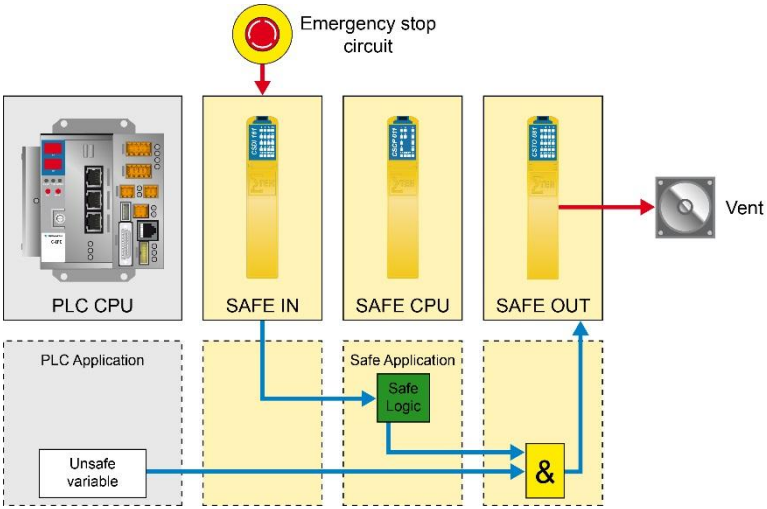

Fig. 54 Using Non-safe Release Signals

The unsafe release signal must be initialized in the hardware. For this purpose, the corresponding "Unsafe Output" signal must be activated in the hardware class.

If for example, output 1 in a Safe output module is connected to an unsafe release signal, a 1 must be entered in the "Unsafe Output" signal of the hardware class. In addition, the "Enable signal used" variable in the SAFETYDesigner must be set to true.

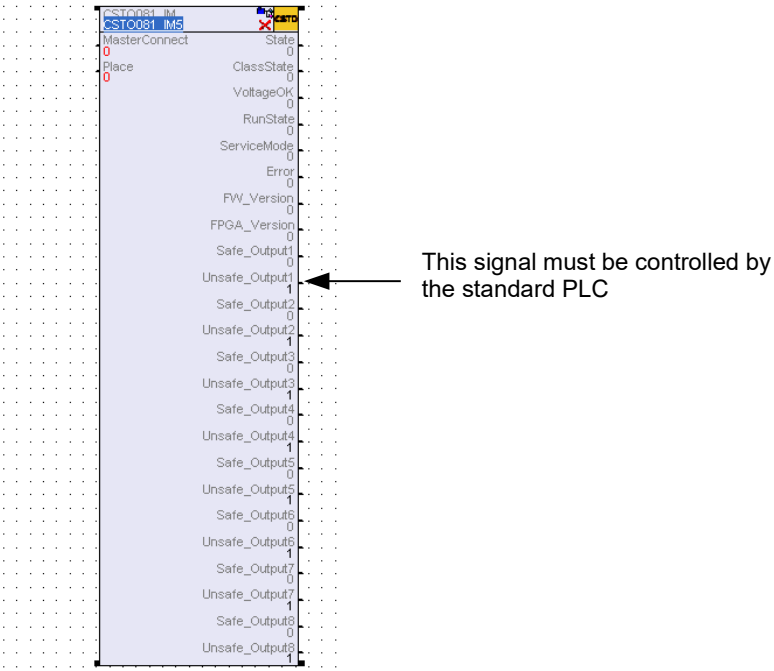

Fig. 55 Hardware class of a Safe output module

4.6 Configuration of a Safety CPU

The Safety system is configured through the Safety CPU. The Safety CPU therefore, is the only Safety module to which the SAFETYDesigner can write. The Safe application is also processed in the Safe CPU. The Safety CPU provides a specific area for the Safe application in the Flash and RAM memory of the micro controller, which cannot be exceeded.

The configuration to available remote Safety modules is distributed during the check configuration phase of the system, with the Quit Error command and during restart after a configuration change. If the Safety CPU does not locate the remote Safety modules, the SAFETYDesigner displays the error (mainly error code 9 or 1009). This can occur, for example, if the standard communication does not function, a remote Safety module has an error or if a Safety module is not available.

Depending on the configuration, the status of a module can vary as follows:

Status	Description
Not configured	The module contains no parameter data. (Delivery condition)
Invalid	The module's parameter data is invalid.
Configured, not verified	The module contains parameter data but is not yet verified and therefore functions in time-restricted capacity.
Verified	The module is verified and can operate without restrictions.

Table 10 Module status depending on the configuration

The configuration status of the Safety CPU(s) is displayed in the SAFETYDesigner.

The maximum cycle time for the Safety CPU to process the Safe application can be set between 1 ms to 50 ms. If the selected cycle time is too short, the system goes into the error mode (error code 1). In this case, the cycle time can be reconfigured in the SAFETYDesigner to ensure that the Safe application can be processed within the configured cycle time. The maximum cycle time of the Safety CPU is estimated by the SAFETYDesigner and serves as a reference value.

4.7 Calculating Monitor Settings (starting with Revision 2)

After creating a configuration, the maximum required cycle time for a Safety CPU and the maximum transmission time of the individual modules can be calculated using the SAFETYDesigner button "Monitored Settings". For a correct calculation, the cycle time of the bus system (C-DIAS or VARAN) must be set in [ms]. The preset value is 1 ms. The number of PDO's transferred per bus cycle must also be set by the user. The preset value is 1 PDO per cycle. Using these settings and the created application (hardware tree configuration and connection in the networks), the values for the cycle time and max. transfer times can be determined. The user can then accept the calculated values in the project.

☞	The user must check the values suggested by the SAFETYDesigner while the system is running.

4.8 Reaction Time

After creating the configuration, the reaction time of the Safe outputs used is displayed in the SAFETYDesigner by pressing the "Check resources" button. The maximum monitored reaction time is then always estimated. If for example, all outputs in a Safe output module have the same reaction time, this is displayed for one output only.

☞	**Important:** The calculated reaction times of the sensors at the inputs and those of the actuators at the outputs are not included in the reaction times calculated here. Relay switching delays are not included in the calculation. With the modules SRO 021 and SRO 022, the times for the relays are included in the calculation.

☞	The user must check the values suggested by the SAFETYDesigner while the system is running (e.g. by repeated measurement of the reaction times while the system is running).

In the following section, determining the reaction time is explained with a concrete example.

4.8.1 Determining the Reaction Time in a Safety CPU with Local In- and Outputs

4.8.1.1 1-Channel Circuit

In this example, input 1 (DI 1) of a Safety CPU is connected to output 1 (TO 1) of the same Safety CPU. The input sensor cannot be supplied by a pulse output, as a test pulse from the input test can affect the Safe application.

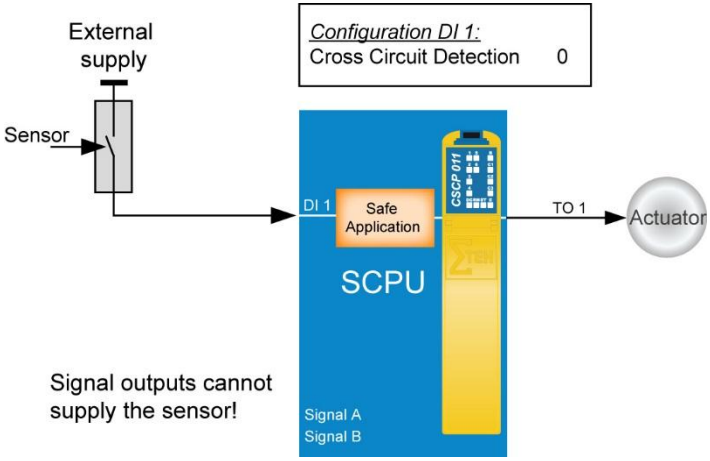

Fig. 56 Local input - Safety CPU - local output

The reaction time of such a system is determined as follows:

$$T_{Reaction\ time} = T_{IN} + T_{SW\text{-}Filter} + 2*T_{SCPU,cycle}$$ (Revision 1)

$$T_{Reaction\ time} = T_{IN} + 2*T_{SCPU,cycle}$$ (starting with Revision 2)

Parameter meanings

Parameters	Description	Configurable
T_{IN}	maximum hardware filter time; 2.5 ms in the worst case	no
$T_{SW\text{-}Filter}$	additional filter time	yes
$T_{SCPU,cycle}$	cycle time of the Safety CPU	yes

Table 11 Configuration parameters of a 1-channel circuit

4.8.1.2 2-Channel Input with Cross-Circuit Detection

In this example, input 1 (DI 1) and input 2 (DI 2) of a Safety CPU are connected to output 1 (TO 1) of the same Safety CPU. The safe inputs come from two different sensors. The input sensors are each supplied by a pulse signal. The corresponding input must be also be configured with the respective signals.

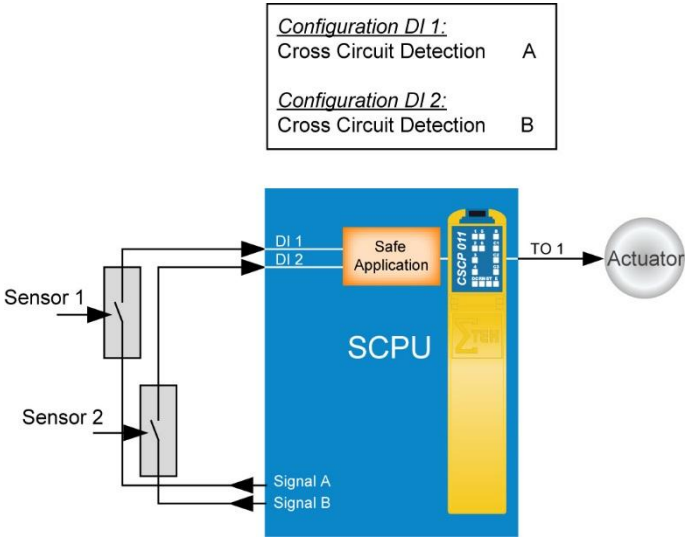

Fig. 57 Local input - Safety CPU - local output

The reaction time of such a system is determined as follows:

$$T_{Reaction\ time} = T_{IN} + T_{Input\ test} + T_{SW\text{-}Filter} + 2*T_{SCPU,cycle}$$ (Revision 1)

$$T_{Reaction\ time} = T_{IN} + T_{Input\ test} + 2*T_{SCPU,cycle}$$ (starting with Revision 2)

Parameter meanings

Parameters	Description	Configurable
T_{IN}	maximum hardware filter time; 2.5 ms in the worst case	no
$T_{SW\text{-}Filter}$	additional filter time	yes
$T_{SCPU,cycle}$	cycle time of the Safety CPU	yes
$T_{Input\ test}$	duration of the input test; 6 ms in worst case	no

Table 12 Configuration parameters of a 2-channel circuit

4.8.1.3 2-channel Connection of a Sensor with Cross-Circuit Detection and Local AND Gate

This involves a 2-channel system, by which both input signals come from the same sensor and are linked with a local AND gate. If the cross-circuit detection is enabled, the SAFETYDesigner calculates the maximum reaction time without the input test time $T_{Input\ test}$. This is because both input signals come from the same sensor and the input test is not performed on both signals at the same time. While the input test is being conducted on the input connected to signal A, the input connected to signal B can thereby initiate the safe mode when necessary or vice versa.

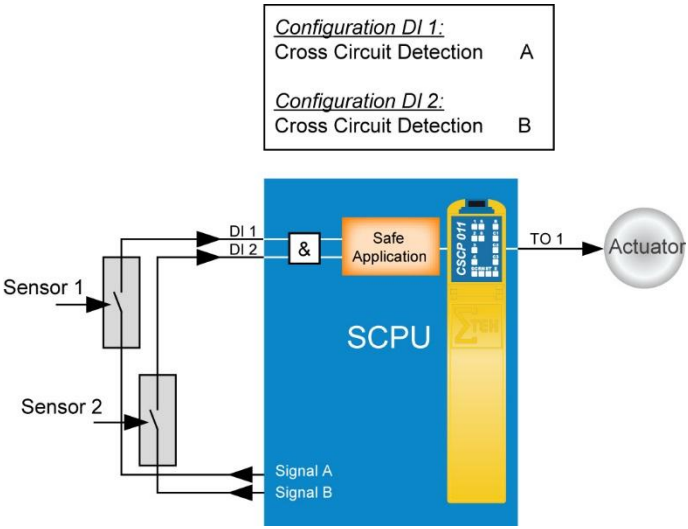

Fig. 58 Sensors connected over two channels

The reaction time of such a system is determined as follows:

$$T_{REACTION\ TIME} = T_{IN} + T_{SW\text{-}FILTER} + 2{*}T_{SCPU,CYCLE} \quad \text{(REVISION 1)}$$

$$T_{REACTIONS\ TIME} = T_{IN} + 2{*}T_{SCPU,CYCLE} \quad \text{(STARTING WITH REVISION 2)}$$

4.8.2 Determining the Reaction time of a Safety CPU with Remote In- and Outputs and Cross-Circuit Detection

This system has, for example, an emergency stop that is connected to a Safe input module. The Safe input module is connected to a Safety CPU by a communication system, e.g. C-DIAS. The Safety CPU processes the local input and sends the result to a remote output module over the bus system.

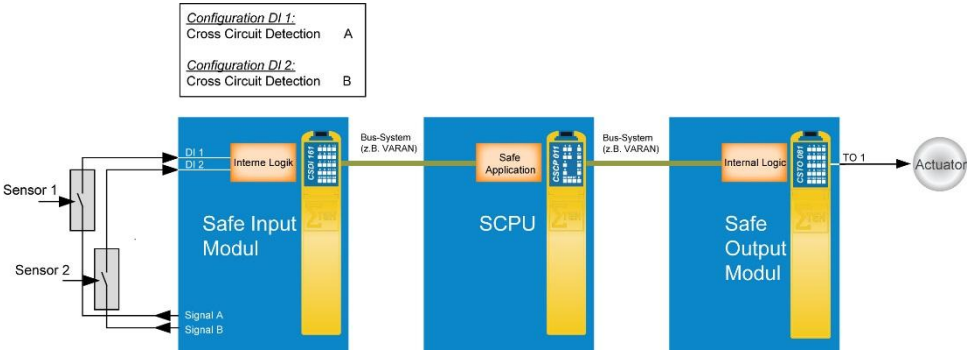

Fig. 59 SIN: Local input - bus - Safety CPU - bus - SOUT: local output

The reaction time of such a decentralized system can be defined as follows:

$$T_{Reaction\ time} = T_{IN} + T_{Input\ test} + T_{SW\text{-}Filter} + 2 * T_{SIN,cycle} + \text{Maximum transmission time (Input)} + 2 * T_{SCPU,cycle} + \text{Maximum transmission time (Output)} + 2 * T_{SOUT,cycle} + T_{Drift}$$

(Revision 1)

$$T_{Reaction\ time} = T_{IN} + T_{Input\ test} + T_{SIN,cycle} + T_{bus} + \text{Maximum transmission time (input)} - T_{bus} + 2 * T_{SCPU,cycle} + \text{Maximum transmission time (output)} + T_{SOUT,cycle} + T_{bus}$$

(starting with Revision 2)

Parameter meanings

Parameters	Description	Configurable
T_{IN}	maximum hardware filter time; 2.5 ms in the worst case	no
$T_{Input\ test}$	duration of the input test; 6 ms in worst case (indirectly through cross-circuit detection)	no
$T_{SW\text{-}Filter}$	additional filter time	yes
$T_{SIN,cycle}$	processing time of the Safe input module	no
Maximum Transmission Time (Input)	the maximum delay between a remote input and the processing Safe CPU allowed	yes
Maximum Transmission Time (Output)	the maximum delay between a Safety CPU and the corresponding remote output allowed	yes
$T_{SCPU,cycle}$	cycle time of the Safety CPU	yes
$T_{SOUT,cycle}$	processing time of the Safe output module	no
T_{Drift}	maximum time drift between two Safety modules (6 ms in worst case)	no
T_{bus}	system bus cycle (C-DIAS or VARAN)	yes

Table 13 Configuration parameters of a 1-channel circuit with remote Safety modules

This time the input is read by the Safe input module. If cross-circuit detection is selected, the time T_{Input} must be added to the reaction time. In addition to the previous examples, the processing time of the Safe input module ($T_{SIN,cycle}$) and Safe output module $T_{SOUT,cycle}$) must also be included.

Furthermore, the maximum transmission times allowed between the Safety CPU and the remote Safety modules must be taken into consideration. In a Safe input, the Maximum Transmission Time is the maximum time delay allowed between a remote input and the processing Safety CPU. Similarly in a Safety output, the Maximum Transmission Time is the maximum time delay allowed between a Safety CPU and its corresponding remote output.

Because each Safety module has its own time base and the modules are synchronized only at specific time points, two Safety modules could drift up to 6 ms apart. This drift (T_{Drift}) must be observed in a system with remote Safety modules.

4.8.3 Determining the Reaction Time with FSoE Communication

This system has, for example, an emergency stop that is connected to an SCP111. The SCP111 processes the local input and sends the result to a remote Safety CPU (as well as an SCP11) with an output module over the bus system.

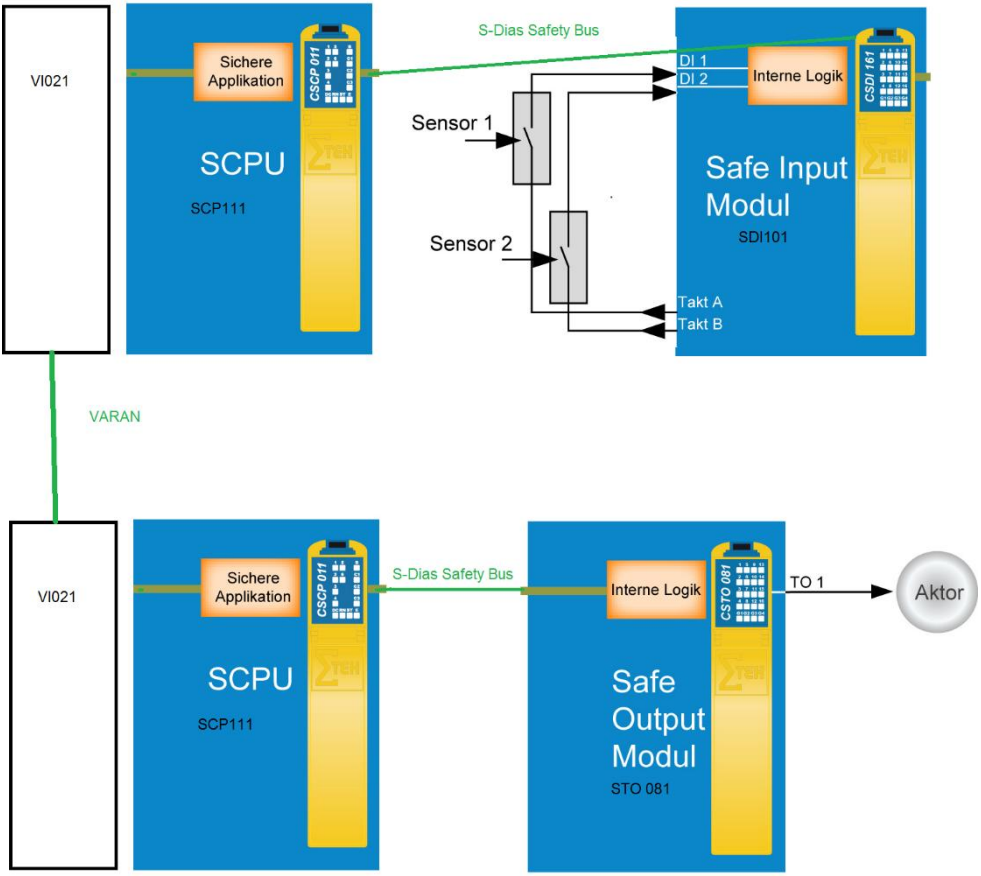

Fig. 60 FSoE Communication

$$T_{Reaction\ time} = T_{IN} + T_{Inputtest} + T_{SW\text{-}Filter}$$
$$+ \ 2 * T_{SCPU,cycle}\ (\text{FSoE Master})$$
$$+ \ 2 * \text{Transmission Time (time setting for the FSoE connection)}$$
$$+ \ 2 * T_{SCPU,cycle}\ (\text{FSoE Slave})$$

(Revision 4)

Parameter Meanings

Parameters	Description	Configurable
TIN	maximum hardware filter time; 2.5 ms in the worst case	no
TInputtest	duration of the input test; 6 ms in worst case (indirectly through cross-circuit detection)	no
TSW-Filter	additional filter time	yes
Transmission Time	maximum transmission time between FSoE master and FSoE slave	yes
$T_{SCPU,cycle}$	cycle time of the Safety CPU	yes

Table 14 Configuration parameter of a single-channel wiring with remote security modules

4.8.4 Fixed Time Parameters that Affect the Reaction Time

In
Table **15** below, the parameters that cannot be changed by the system are listed. These parameters represent the worst-case scenario.

Abbreviation	Max.	Explanation
T_{IN}	2.5 ms	maximum input delay
$T_{SIN,cycle}$(Revision 1)	2.5 ms	internal cycle of the input module
$T_{SIN,cycle}$(starting with Revision 2)	1.8 ms	internal cycle of the input module
$T_{SOUT,cycle}$(Revision 1)	3.5 ms	internal cycle of the output module
$T_{SOUT,cycle}$(starting with Revision 2)	1.8 ms	internal cycle of the output module
T_{Drift}	6 ms	maximum time drift between the Safety modules
$T_{Input\ test}$	6 ms	maximum time of the input test with cross-circuit detection

Table 15 Fixed parameters

4.8.5 Configurable Time Parameters that Affect the Reaction Time

In table 16 below, the configurable time parameters are listed.

Abbreviation	Min	Max	Default	Explanation
$T_{SW\ filter}$	0 ms	100 ms	0 ms	configurable input filter to filter out possible external input signal noise.
SCPU, cycle (Revision 1)	1 ms	50 ms	6 ms	corresponds to max. cycle time; see chapter 4.6
SCPU, cycle (starting with Revision 2)	1 ms	50 ms	3 ms	corresponds to max. cycle time; see chapter 4.6
Maximum transmission time (input) (Revision 1)	1 ms	100 ms	10 ms	maximum transmission time, which must be configured for each Safe digital input
Maximum transmission time (output) (Revision 1)	1 ms	100 ms	10 ms	maximum transmission time, which must be configured for each Safe digital output
Maximum transmission time (starting with Revision 2)	1 ms	100 ms	value is calculated	maximum transmission time, which must be configured for each Safe digital input/output
Maximum transmission time for HGW and interfaces IP addresses (starting with Revison 4)	1 ms	5000 ms	300 ms	maximum transmission time for HGW and WLAN connections

Table 17 Settable time parameter

In addition to the time parameters in
Table **17**, whether the system is 1-channel or 2-channel must be determined. If it is a 2-channel system and cross-circuit detection is desired, one input must be connected to signal A and the other to signal B and then configured.

Important:
The VARAN cycle time setting has a direct influence on the maximum transmission time. To ensure that all Safe communication is continuously available, the maximum transmission time must be at least 5 times the VARAN cycle time setting (Revision 1).

5 Operation

5.1 Processing the Safe Application

After the Safety modules have been configured successfully (see chapter 4), the system goes into the operational mode.

Important:
In the operation mode, the SAFETYDesigner must be disconnected from the control.

5.2 Operating the Validation Button

The Safety system can also be controlled independently of the SAFETYDesigner using the validation button. As with the SD card, the validation button is only implemented in the Safety CPU. Since the system is in unrestricted operation, only a reasonable subset of the Safety designer commands is possible. These are:

- ***Quit Error***
  With this command, an error can be reset. If the error persists after the "Quit Error" command, it is the result of either a "permanent error" or the error was detected again, e.g. due to incorrect wiring.

- ***Clear Config***
  With this command, the Flash memory in the Safety CPU is cleared when for example, a new application is loaded from the SD card. The function of this command is the same as the "clear" command in the SAFETYDesigner.

- ***Set Verified***
  With this command, the Set Verified flag is set. This means the mode changes from time-restricted operation to unlimited operation.

An incorrect command will be detected when entered. The LED on the validation button starts to blink and the system does not change its current mode. 8520_up_9510

Inputting commands with the validation button consists of 3 sequential components; the start and End sequence, and the sequence for selecting a command (see the following diagram).

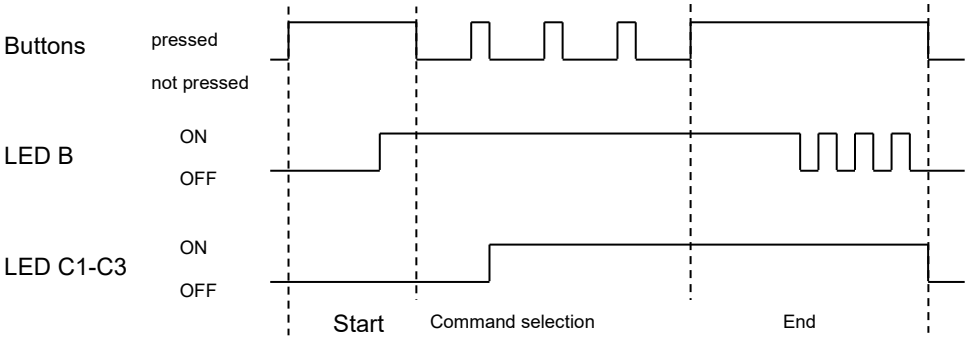

Fig. 61 Command input with the validation button

5.2.1 Explanation of the individual sequences

5.2.1.1 Start sequence

The button must be pushed until LED B lights (after approximately 3 seconds). If the button is pushed too long (longer than approximately 10 seconds), an Error sequence is initiated (see "Error sequence"). The same applies when the button is released too soon (before LED B lights) or it is pushed immediately after being released (time between 2 button presses shorter than 200 ms).

5.2.1.2 Command Selection sequence

After the Start sequence, the desired command is selected. This selection is made with button presses in the following time intervals: Minimum press duration is 200 ms, maximum is approximately 3 seconds; the minimum pause between individual button presses is 200 ms, the maximum is 10 seconds. After each correct button press (incl. The minimum pause of approx. 200 ms), the selected command is shown with LEDs C1 - C3. If an invalid command is selected (see "valid commands"), the Error sequence is initiated; as with not correctly observing the time intervals. LED B lights continuously during this sequence.

5.2.1.3 End sequence

This sequence is used to confirm the selected command. Here, the button is pressed until LED starts to blink (approx. 3 seconds, blinks in a slow interval). The number of light pulses in LED B depends on the previously selected command (see "valid commands").

If LED B turns off, the button must be released. After the minimum pause of approximately 200 ms, in which the button must not be pressed, the service mode is imitated and the command is executed.

If the button is pressed for longer than approximately 3 seconds, the selected command is not accepted and the Error sequence is displayed. The same applies when the button is released too soon or the minimum pause of 200 ms is not observed. After executing the command, the corresponding mode is initiated depending on the command (see "Valid Commands").

If executing the command leads to an error (i.e. because SET_VERIFIED should be executed although no valid configuration data is available in the Safety CPU), the Error sequence is initiated.

5.2.1.4 Error sequence

If an invalid button press occurs, as in the sequences described above, the Error sequence is initiated. LED B indicates this sequence with fast blinking, which lasts for at least 3 seconds.

If the button is still pressed after 3 seconds, LED B will continue to blink until the button is released and a minimum pause of approximately 200 ms has elapsed. After LED turns off, the start sequence can be re-entered.

After ending the Error sequence, the mode is changed as described in "Overview of Module Status". If LEDs C1 – C3 are lit, they are deactivated after the error sequence is ended.

5.2.1.5 Overview of Commands

The number of button presses corresponds to the number of light pulses in LED B during the End sequence.

Commands	Number of button presses	LED C1	LED C2	LED C3
QUIT_ERROR	1	X		
CLR_CFG	2	X	X	
SET_VERIFIED	3	X	X	X

Table 18 Validation button command

5.2.1.6 Overview of Module statuses and commands

The following tables show a sample of the statuses in which the system can be found, the commands that can be active during the respective status and their functions.

	COMMAND		
System status	***QUIT_ERROR***	***CLR_CFG***	***SET_VERIFIED***
Check-Configuration		X	
Time-restricted operational mode		X	X
Operational mode		X	
Service mode		X	
Error	X		

Table 19 Module statuses and commands

Executed command	Command function	Status after command execution
QUIT_ERROR	A possible error is cancelled in the Safety CPU and all safe I/O modules required by the Safety CPU and the error mode is ended.	SW-RESET *)
CLR_CFG	The configuration in the Safety CPU is deleted. After executing the command, the Safety CPU is now in service mode.	Service mode
SET_VERIFIED	The configuration status is set to "verified".	Operational mode
*) A SW-RESET is performed. If the error still exists, the Safety CPU remains in the error mode. Otherwise, the Safety CPU starts correctly. **General note:** If a command was entered incorrectly, the Safety CPU initiates the error sequence (see above). After ending the Error sequence, the command can be reentered.		

Table 20 Validation command

INFO

If the Safety CPU sets itself in the error mode, it is reset by sending the "Quit Error" command with the validation button. If remote modules that are in the error mode belong to the configuration in the Safety CPU, their status is not reset. To reset these errors, the "Quit Error" command must be resent.

5.3 Error Diagnosis

5.3.1 Diagnosis through the LEDs

Using the LEDs the Safety modules different error Types can be recognized:

5.3.1.1 Module Error

If the Safety module detects an internal error during the self-test, it goes into the error mode. This is indicated by the continuous lighting of the Error LED (see chapter 2.5.5). A more detailed diagnosis of the error is not possible through the LEDs. To identify the error, a diagnosis with the SAFETYDesigner is required. If the DCOK-LED is off, this is usually caused be an incorrect supply voltage. In this case, the external voltage supply from the pulse outputs or the Safe outputs must be checked.

5.3.1.2 Remote Module Error

If a Safety output module for example, expects data from another remote module (e.g. a Safety CPU) in error mode, the Safety CPU only receives error data. The Safe output module then switches the outputs to the safe status and the Error LED starts to blink. To correct the error, the error in remote module must first be diagnosed with the SAFETYDesigner.

The same response is given when the Safety CPU in the above example functions correctly but the Safe data received by the Safe output module is outdated. If this occurs, the configuration may need to be checked and the maximum age adjusted. If this is not the case however, it is possible the Safe communication between the two modules was interrupted and the output module cannot receive valid data.

5.3.1.3 Internal error

If an internal error occurs (hardware error), it is detected during the internal self-test. The module then goes into the error mode. The error can be identified through the SAFETYDesigner. If the error cannot be reset with the Quit Error command, the user must contact the manufacturer.

5.3.1.4 Safe In- or Output Error Mode

Incorrect wiring in Safe in- or outputs can also be partially detected. In such a case, the Safety module wiring must be checked.

The detectable errors essentially depend on the application; a cross-circuit test can therefore only detect a cross-circuit in 2-channel wiring. This must be set in the SAFETYDesigner explicitly. Circuit examples are given in the section "Determining the Reaction Time".

Whether or not an error can be detected at all also depends on the electrical status of the Safe in- or output. An inactive output for example, cannot be tested to see if can be deactivated. Nor can an inactive input signal be tested to see if the input can be deactivated.

5.3.2 Diagnosis with the SAFETYDesigner

The user can, regardless of the error, go online with the SAFETYDesigner to identify the error. If a Safe module is in error mode, this can be read with the "Get Module State" service command. For a Safety CPU, the error mode is automatically displayed in the console window of the SAFETYDesigner.

If the Safety module is not in error mode, but an error was detected in a Safe in- or output, it will be displayed in the "Error of Channels" window in the Safety Designer.

5.3.3 Troubleshooting

If an error occurs due to incorrect wiring for example, it can be cancelled after the wiring has been corrected. If however, an error caused by a hardware error is diagnosed, it cannot be cancelled. In this case, a "permanent error" exists. Examples of such errors are:

Error Type	Error message
RAM error	E_RA_MARCH; E_RA_GALPAT
ROM error	E_ROMTEST_VECTORS, E_ROMTEST_BOOTSECTOR, E_ROMTEST_OSIMAGE
Internal clock error	E_REFCLOCK_MIN, E_REFCLOCK_MAX
Defective output transistor	E_WD_TEST E_SO_TEST_FET3 E_SOTEST_HSS1
Module drift to large	E_CYCLIC_TIME_DRIFT

Table 21 Permanent error

If one of these permanent errors occurs, the affected Safety module must be replaced. The defective Safety module must then be sent to SIGMATEK GMBH & CO KG for repair.

If a Safe output can no longer be deactivated and this error occurs during the operational mode, the corresponding output goes into error mode (output LED flashes). In the "Error of Channels" field in the SAFETYDesigner, the error can now be read. If "Quit Error" is now sent and the error is not corrected, the error mode remains active. If the error is eliminated however, the system changes back to the operational mode after the "Quit Error" command.

5.3.4 Safe Input Errors

The errors listed here are detected only in Systems where the cross-circuit detection is enabled.

5.3.4.1 Pulse Signal Cannot be Detected

If the cross-circuit detection is activated and the Safe input to be read is high, the input sensor must be supplied by the Safety module with the corresponding pulse supply. This pulse supply is deactivated for a short time in regular intervals. Thereby whether a cross-circuit exists between two inputs supplied with different signals or whether the input is still inactive is tested. If the input is high and the pulse signal is not detected, an error is identified. The possible causes are incorrect wiring and/or a defective signal output. After eliminating the cross-circuit, the Quit Error command or restarting the system can be used to cancel the error.

5.3.4.2 An Incorrect Signal was Detected

In this case, a cross-circuit between the inputs or incorrect wiring is the cause and in the "Error of Channels" window of the SAFETYDesigner, the error code 103 is shown; the LED of the corresponding input blinks[2]. After confirming the error, it can be cancelled with Quit error or by restarting the system; errors are eliminated.

5.3.5 Safe Output Errors

5.3.5.1 Back-read and Expected Output Values Don't Match

If the values read from the output signals by the Safety modules do not match those calculated in the application, Error 137 or 1137 is displayed in the "Error of Channels" in the SAFETYDesigner. The corresponding output LED blinks and the Safe outputs in the module are deactivated. This error can be caused by either a hardware defect or faulty wiring of the output (capacitive load too high). The wiring must be checked. If the error was corrected, it can be cancelled with a Quit error command or by restarting the system.

[2] This blinking is only valid fort he C-Dias system.

5.3.5.2 Outputs Cannot be Deactivated

If the outputs cannot be deactivated, the error is detected within the internal test interval (every 26 seconds). In the corresponding Safety module, the affected output blinks and is shut down. In the SAFETYDesigner under "Error of Channels", the defective output is displayed with error code 143, 1143, 144 or 1144. The error can have the following causes:

- Safe output is stuck at 24 V due to a wiring error
  ➢
- The capacitive load on the Safe output is too high (see sheet for the respective Safety modules)
  ➢
- The Safe output is defective

After correcting the error (with the exception of defects that cannot be corrected), the error must be cancelled. If the error mode is still active after the Quit Error command has been sent (e.g. with defect), the output remains inactive. If the system is restarted or the Quit Error command is initiated with the validation button, this defect is detected in the POST. The Safety module then changes to error mode.

5.3.5.3 Cross-Circuit between Outputs

If a cross-circuit exists between Safe outputs, they are deactivated and the Error LEDs of the affected outputs blink. In "Error of Channels" of the SAFETYDesigner, the defective output is displayed with error code 144 or 1144. During operation, this error can only be detected if the Safe outputs are set. If this error occurs, the wiring of the Safe outputs should be checked. If the error is corrected, it can be reset with the Quit Errors command.

5.3.6 Configuration Distribution Errors

If a configuration was successfully loaded into a system consisting of a Safety CPU and remote Safety modules and the distribution process is initiated, an error can occur in this process under certain conditions. The same is also true when distributing the configuration after restarting such a system. In such a situation, error 9 or 1009 is displayed in the SAFETYDesigner with special identifiers. The possible identifiers are:

- ***Identifier 0:***
  If this error code is triggered, more than one Safe module is missing from hardware topology. If this error occurs, check whether all Safety modules are really available. The communication with each module must also be intact. This can, for example, be checked using the hardware classes in the standard PLC. If all hardware classes for the Safe modules have been located, the communication is functional.
  After correcting the error, it can be cancelled with the "Quit Error" command.

- ***Identifier 1:***
  This error occurs when, for example, more the one Safety module has been exchanged. In this case, the configuration must be redistributed.

- ***Identifier 2:***
  A Safety CPU in a configuration cannot be identified. Whether all Safety CPUs in the configuration are actually available and with communication with them is correct.

- ***Identifier 3:***
  If this error occurs, the configuration cannot be distributed. Check whether all Safety modules are available and the communication is connected correctly. In addition, check whether the hardware classes for the Safety modules are placed correctly in the standard PLC project. The error can be cancelled with the "Quit Error" command or by restarting the system.

- ***Identifier 4:***
  This identifier indicates an error in a remote module. This error must be identified and corrected. The error can then be cancelled with the "Quit Error" command or by restarting the system.

- ***Identifier 5 (S-DIAS modules):***
  This identifier indicates that at least one local SDI module of an SDIAS CPU is missing. The missing module must be added. The error can then be cancelled with the "Quit Error" command or by restarting the system.

- ***Identifier 6 (S-DIAS modules):***
  This identifier indicates that at least one local Safety Interface module of an SDIAS CPU is missing. The missing module must be added. The error can then be cancelled with the "Quit Error" command or by restarting the system.

- ***Identifier 7 (S-DIAS modules):***
  This identifier indicates that at least one local STO module of an SDIAS CPU is missing. The missing module must be added. The error can then be cancelled with the "Quit Error" command or by restarting the system.

- ***Identifier 8 (S-DIAS modules):***
  This identifier indicates that at least one local SRO module of an SDIAS CPU is missing. The missing module must be added. The error can then be cancelled with the "Quit Error" command or by restarting the system.

- ***Identifier 9 (S-DIAS modules):***
  This identifier indicates that an SDIAS CPU (module is in Master mode) tried to write the configuration. The configuration is set to the master mode. The configuration in the module must be deleted. The configuration can then be redistributed.

- ***Identifier 10 (S-DIAS Modules):***
  This identifier indicates that a slave module has detected an incorrect configuration in remote modules. Remote modules must be configured. The error can then be cancelled with the "Quit Error" command or by restarting the system.

- ***Identifier 11 (S-DIAS modules):***
  This identifier indicates that an input module is inserted into the wrong slot. Insert module into correct slot. The error can then be cancelled with the "Quit Error" command or by restarting the system.

- ***Identifier 12 (S-DIAS modules):***
  This identifier indicates that an output module is inserted into the wrong slot. Insert module into correct slot. The error can then be cancelled with the "Quit Error" command or by restarting the system.

- ***Identifier 13 (S-DIAS modules):***
  This identifier indicates that a SafeDint input module is inserted into the wrong slot. Insert module into correct slot. The error can then be cancelled with the "Quit Error" command or by restarting the system.

- ***Identifier 14 (S-DIAS modules):***
  This identifier indicates that the number of local input is incorrect. Correct the number by adding or removing input modules. The error can then be cancelled with the "Quit Error" command or by restarting the system.

- ***Identifier 15 (S-DIAS modules):***
  This identifier indicates that the number of local outputs is incorrect. Correct the number by adding or removing output modules. The error can then be cancelled with the "Quit Error" command or by restarting the system.

- ***Identifier 16 (S-DIAS modules):***
  This identifier indicates that an attempt was made to activate a missing module. Insert module at the correct position. The error can then be cancelled with the "Quit Error" command or by restarting the system.

- ***Identifier 17 (S-DIAS modules):***
  This identifier indicates that an expansion module could not be configured. Try to reconfigure. The error can then be cancelled with the "Quit Error" command or by restarting the system.

- ***Identifier 18 (S-DIAS modules):***
  This identifier indicates that too many expansion modules are available. Remove excess modules. The error can then be cancelled with the "Quit Error" command or by restarting the system.

- ***Identifier 19 (S-DIAS modules):***
  This identifier indicates that too few expansion modules are available. Add missing expansion modules. The error can then be cancelled with the "Quit Error" command or by restarting the system.

- ***Identifier 20 (S-DIAS modules):***
  This identifier indicates that an incorrect module is mounted. Mount the correct Safety Interface module. The error can then be cancelled with the "Quit Error" command or by restarting the system.

6 System Changes

6.1 Updating Safety Modules

The customer cannot run a Safety module's Firmware update. To update the firmware, the Safety module must first be sent to SIGMATEK GMBH & CO KG.

6.2 Changing the Configuration

A change in the configuration must be made through the SAFETYDesigner. The configuration file can only be changed when the SAFETYDesigner is disconnected from the target system; no online connection between the two can exist.

After changing the configuration file, it must be loaded to the appropriate system through the SAFETYDesigner. After successfully downloading the configuration, the system changes to the restricted runtime mode. The target system must then be validated. After thorough testing of all functions for correctness, the system can be changed to the unrestricted runtime mode.

When optional Safety modules are exchanged, the system must be reconfigured and validated. This can be done either through the SAFETYDesigner or with the SD card.
If this re-validation does not take place, the SCP loses its configuration and switches to an error state (ERRVAL 222 / 1222 Temporary Operation Time – see chapter 2.6.4). This is a safety measure for unauthorized modules in our Safety system.

6.3 Exchanging Modules

When exchanging a Safety module, the exchange of a Safety CPU must be distinguished from a remote Safety input or output module.

DANGER:
Before exchanging a Safety module, the voltage supply must be disconnected from the system.

	INFO! When optional Safety modules are exchanged, the system must be reconfigured and validated. This can be done either through the SAFETYDesigner or with the SD card. If this re-validation does not take place, the SCP loses its configuration and switches to an error state (ERRVAL 222 / 1222 Temporary Operation Time – see chapter 2.6.4). This is a safety measure for unauthorized modules in our Safety system.

6.3.1 Exchanging a Safety CPU

The newly inserted Safety CPU must first be reconfigured. This can be done either through the SAFETYDesigner or with the SD card.

6.3.2 Exchanging a Safe In- or Output

The exchange of a Safety module is supported by the system. After turning off the power supply, the Safety module can be replaced with a new one. The system can then be re-started. If the Safe system is the operational mode before the exchange, it goes into the temporary operational mode when restarted. In the change to the unrestricted operational mode, the system must be revalidated.

6.3.3 Exchanging Several Safe In- or Outputs

If more the one Safety module is exchanged, the Safe system goes into the error mode when restarted; the error code 9 or 1009 is output In this case, the entire system must be reconfigured.

6.3.4 Exchanging Safe Input or Output Modules with the SCP 010, SCP 011, SCP 111, SCP 111-S and SCP 211 Safety Modules

For the SCP 010, SCP 011, SCP 111, SCP 111-S and SCP 211 modules, several related expansion cards can be exchanged. After turning off the power supply, the Safety modules can be replaced with new ones. The system can then be restarted. If the Safety system is in operational mode before exchanging the Safety modules, it is retained.

6.4 Adding a Safety Module

If the Safe system is in the operational mode and a Safety module is added that does not belong to the configuration, it has no effect on the Safe system.

If the added Safety module is already configured, the Error LED of this Safety module may blink, if for example, a configured Safe output is added and data is expected from an unavailable Safety CPU. However, this has no effect on the Safe system.

When adding a previously configured Safe input module, it is possible that it changes to the operational mode normally. This module then sends Safe data, but does not find a recipient. This module therefore has no effect on the Safe system.

6.5 Removing a Safety Module

If a Safety module used in a Safe system is removed, the following cased must be identified.

6.5.1 Safe Input Module Removed

If a Safe input is removed during operation (e.g. bus communication with the module fails), the Error LED in the Safety CPU for the remote input module will start to blink. The outputs corresponding to the input module change to the Safe status. In the SAFETYDesigner, error 199 (maximum age exceeded) is displayed in the affected outputs. If the function of the failed Safety modules returns (e.g. communication is re-established), the affected outputs remain in Safe status. The error must be cancelled with the "Quit Error" command or by restarting the system.

6.5.2 Safe CPU Removed

If the safe safety CPU fails, this is determined based on the expectations of the dependent Safe output module. The Error LED of the affected output module will blink and the dependent Safe outputs change to Safe status. If Safe control is accessed online with the SAFETYDesigner, the Safety CPU is no longer located. Because the Safe input module dependent on the Safety CPU has expects no data, it does not detect the failure of the Safety CPU. If the function to the Safety CPU returns to the system, the corresponding outputs remain in the Safe status. To exit the error mode, a "Quit Errors" command must be triggered or the system restarted.

6.5.3 Safe Output Module Removed

If a Safe output module fails, the affected Safe outputs of other Safe modules change to the Safe status. The Safety CPU detects the failure of the Safe output module only if a Safe output from the malfunctioning module is read in the configuration of the Safety CPU (e.g. if the outputs link other modules). If this is the case, the Safety CPU's Error LED begins to blink and the affected Safe outputs change to the Safe status. If no Safe output from the failed output module is read in the configuration, it is not registered by the Safety CPU. When the function of the Safe output module returns, the previously triggered error remains. The system must either be restarted or a Quit Error command sent.

7 Special features of the System

7.1 Using Optional Modules (starting with Revision 2)

In the SAFETYDesigner, Safety modules or reading interfaces can be switched to "optional" in the property browser. This means that the individual modules or interfaces for processing the configuration in the Safety CPU are not required. For the data of these modules of interfaces, a user-defined value can be used. The uses of optional modules or interfaces have requirements.

In the safety application, special function blocks (SF_Optional_Pwd/ SF_Optional_PwdII and SF_Optional_Switch) are placed after the inputs of the optional module/interface that send defined values to the underlying logic when a module or interface is missing (also those that are not in safe mode).

If the accessibility of optional modules must be determined for the application, a SafeBool set to a constant "True" can be created in the interface. This allows the application to determine whether the value is from the optional module or predefined for error handling.

DANGER!
Here, it is important to keep in mind that a dangerous situation could occur if the status of these functions blocks (regarding the availability of an optional module/interface) does not reflect reality.

Important:
After each switch between optional and non-optional, the user must test the system for correctness.

Important:
The PLC program must be restarted after each switch between optional and non-optional.
Starting with Firmware V245, it is also possible to connect and use an optional module without restarting the program in the PLC. In the program, the QuitCommError server of the SCP 010 HW class must be written for this purpose. Writing to this server clears communication errors. Thereby, a (possibly unexpected) restart of the machine can occur. The user must therefore be made aware of this danger before deleting such an error and given the chance to cancel the process (e.g. through a dialog window with the appropriate instruction text and buttons to continue and cancel respectively).

When optional Safety modules are exchanged, the system must be reconfigured and validated. This can be done either through the SAFETYDesigner or with the SD card.
If this re-validation does not take place, the SCP loses its configuration and switches to an error state (ERRVAL 222 / 1222 Temporary Operation Time – see chapter 2.6.4). This is a safety measure for unauthorized modules in our Safety system.

Important:
The system can only be changed (between optional and non-optional) **by trained personnel**.

Important!
The SF_Optional PwdII function block cannot be used in the Safety CPUs CSCP 011 and CSCP 012!

7.2 Safety Measures and Guidelines

Using the "SF_OPTIONAL_PWDII" function block, all safety functions are made; the following measures and danger warnings must therefore be observed. Non-compliance with this warning can lead to serious injury or death.

	The machine operator must be aware of the possible risks of using the "SF_OPTIONAL_PWDII" function block and in compliance with the valid standard requirements for the specific application (for example, hydraulic press brake), create a risk analysis and take the appropriate measures for risk minimization.
	The duration of validity for the codes (login time) calculated by the Safety CPU must be as short as possible. It is essential to ensure that they do not overlap shifts.
	The password input and confirmation of the automatically calculated codes must be performed by the same authorized setter.
	During the period of validity of the automatically calculated codes, the machine must be permanently in view of the technician.
	Except for the technician, no other personnel can be within the limits of the machine defined in EN 12100. It is essential that the appropriate measures be taken to prevent unlimited access to the machine.
	Command devices without an Emergency Stop function must be installed so that they are within reach and an emergency stop can be triggered from any position

7.3 Using Interface Variables (starting with Revision 2)

With interface variable, communication between Safety CPUs in different projects is possible (Safety-CPUs are configured in different Safety projects and must be positioned at the bus master). This means that a Safety CPU writes the data and another Safety CPU reads the data provided. More information on interface variables can be found in the LASAL SAFETYDesigner description.

7.4 Master and Slave Mechanisms with the SCP 010, SCP 011, SCP 111, SCP 111-S and SCP 211

In the SAFETYDesigner, SCP 010/SCP 011/SCP 111/SCP 111-S/SCP 211 Safety modules can be switched to master or slave through the property browser. At least one Safety CPU should be operated in master mode. The modules in slave mode are assigned to the modules in master mode.

Advantages for the user:

- The configuration only needs to be downloaded to the master modules
- Downloading the configuration to an SD card in only needed for the master modules
- Logging in is only required for the master modules
- No password setting is required or the slave modules
- Quit Error and slave start through the assigned master module
- Slave module does not have to be verified

More information on the slave modules can be found in the LASAL SAFETYDesigner description.

☞	Modules in slave mode cannot be operated without their assigned masters. A slave module can only run in operational mode when the master module is running in operational/temp. operational mode.

☞	If a module is operated in slave mode, whether the module is configured as a master must first be checked. If the module is configured as a master, the configuration in the module must be deleted.

☞	It is recommended that different Master systems communicate with one another through the Master modules. A Master system consists of a Master module and its corresponding Slave modules. No Slave module of a Master system should communicate with another Master system. With such direct communication, it may be necessary to restart the system several times.

7.5 Using the SCP 010, SCP 011, SCP 111, SCP 111-S and SCP 211 in Stand-alone Mode

The S-DIAS SCP 010, SCP 011, SCP 111, SCP 111-S and SCP 211 modules can be used as a stand-alone variant. This means that the module does not have to be connected in a standard PLC project. The module is configured directly and not through a standard PLC (Exception: SSI). More information on use in stand-alone mode can be found in the LASAL SAFETYDesigner description.

7.6 Communication via FSoE (Revision 4)

7.6.1 What is FSoE Communication

FSoE communication is the exchange of Safe data between two Safety modules via the FSoE protocol.

Fail Safe over EhterCat (FSoE) is a protocol for transmitting Safety-relevant data using an FSoE master and FSoE slave. In each FSoE cycle, the FSoE master sends data to the FSoE slave and starts a Watchdog timer at the same time. The FSoE slave processes the data and generates a return message for the FSoE master. The FSoE slave also start a runtime monitor. The FSoE master receives the data and stops the Watchdog time. The FSoE master then generates new data to send after the cycle is completed. Each FSoE slave has, in the respective system, an FSoE slave address. A connection is made via this slave address. Each connection also assigned a unique connection ID in the respective system.

7.6.2 Creating an FSoE Connection between 2 Modules

The slave address and connection IDs are automatically assigned by the SAFETYDesigner. Determining which module is the FSoE master or FSoE slave of an FSoE connection is also automatically defined by the SAFETYDesigner. The assignment is made by placing Safe inputs, Safe outputs and interfaces in the network of a Safety CPU. A connection is thereby made between two Safety modules. The slave address and connection ID are defined by the SAFETYDesigner. The allowable values are predefined by the limit settings for the slave addresses and connection Ids in the project. The user can set the limits between 1 and 65335 (default value 1-65335).

With the use of writing interfaces in an FSoE connection, the maximum number of connections used as interfaces used for reading must be set. The default value is 10. The maximum value is 150. This is necessary, since an individual FSoE connection must be created for each use. Writing interfaces are always seen as the FSoE slave in a connection. No connection IDs can be assigned for the writing interfaces; the connection ID is determined for the FSoE master (reading interface) only. When exporting writing interfaces, the slave address as well as the limit settings for the slave addresses and connection ID's are included in the export.

This exported data is loaded in the project of the reading interface accordingly. The exported slave address is used in the reading interface (always functions as FSoE master) as the slave address for the connection to the FSoe slave. The exported value limits allow testing to ensure that the slave addresses and connection ID's are unique.

The maximum transmission time must be set for each FSoE connection (transmission time on the bus); the SAFETYDesigner calculates this time and automatically includes it when creating the connection.

	The user must ensure that the slave addresses and the connection ID's are unique in the entire system. The SAFETYDesigner can only test the uniqueness within the project.

	In the reading interfaces, the option is available to assign 0 as a slave address. In this case, the Safety CPU determines the slave address stored in the writing interface over the defined hardware path. A connection ID of 0 can also be assigned. In this case, the connection ID’s stored in the module are used. The value 0 can only be used as a connection ID when the corresponding connection ID's are predefined in the module.

	For writing interfaces, slave address of 0 can be assigned. In this case the slave address stored in the module are used. The value 0 can only be used as a slave address when the corresponding slave addresses are predefined in the module.

7.6.3 Changing the Values

The user can check the value settings in a dialog and change them if necessary. The dialog is called via the context menu of the project.

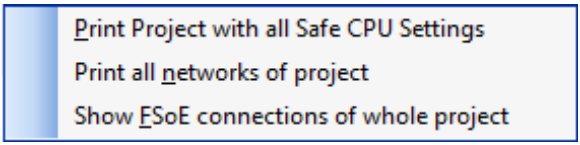

Fig. 62 Command input with the validation button

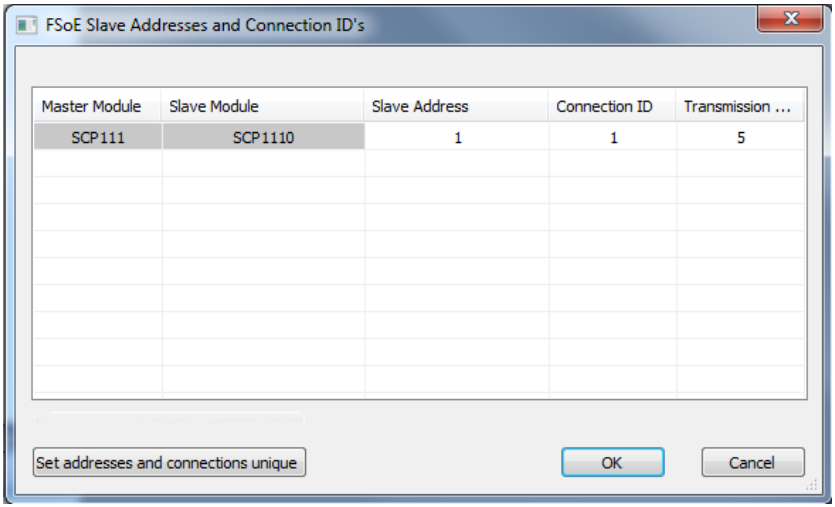

Fig. 63 FSoE connection

The dialog shows the individual FSoE connections with the settings. Cells with a grey background cannot be changed. The FSoe master of a connection is located in the 'Master Module' column. Writing interfaces have no FSoE master; an empty cell is displayed. In the 'Slave Module' column, either the FSoE slave of a connection or a reading/writing interface is located. The reading and writing interfaces are labeled accordingly. The address of an FSoE slave is listed in the 'Slave Address' column. The address can be changed by the user and must be unique in the system. The ID of a connection is listed in the 'Connection ID' column. The ID can be changed by the user and must be unique in the entire system. Writing interfaces have no connection ID; an empty cell is displayed. In the 'Transmission Time' column, the time needed for the transmission from one module to another module is listed. The time can be changed by the user. All values, which the user can change are tested for validity. Invalid values cannot be accepted.

Allowable values for the slave address: 1-65335 (depending on the set value limits); for interfaces, 0 can be assigned (this means that for reading interfaces, the slave address is

determined from the hardware path of the coupler module; for writing interfaces, a slave address stored in the module is used). For reading interfaces, the limits in the project are used for the writing interface (data is taken from the imported XML file).

Allowable connection ID values: 1-65335 (depending on the set value limits.

Allowable transmission time values: 1-5000 ms

Using the 'Set addresses and connections unique' button, the slave addresses and connection ID can be set to unique values in the project. All value settings are deleted and new values are set using the value limits (starting with the smallest value possible).

With OK, the changed data is enabled in the project.

7.6.4 Watchdog Time

The maximum Watchdog time monitored is the time that passes between sending an FSoE frame and receiving an answer. The user does not have to set this time, instead, it is determined by the SAFETYDesigner via the user-defined transmission and cycle times of the module. The user-defined transmission time contains the transfer time on the bus and a bus cycle offset (Safety CPU's don't operate synchronously with the bus).

Calculation of the Watchdog time by the SAFETYDesigner:

Time = 2 * FSoE master cycle time
+ 2 * FSoE-Slave cycle time
+ 2 * Transmission time

While calculating the Watchdog time for the interfaces, the cycle time for writing interfaces cannot be determined; it is therefore necessary that the user determines this time from the project of the writing interfaces and adds the transmission time of the reading interfaces. The writing interface data can be taken from the Monitoring Settings dialog of the other project.

Determining the transmission time of the reading interface.

Time = FSoE slave cycle time (cycle time for writing interface)
+ Transmission time (for writing interface)
+ Transmission time (for writing interface)

7.7 Creating an FSoE Connection through an IP Address

The function is limited to Safety CPUs with FSoE communication (SCP 111, SCP 111-S and SCP 211). The communication via IP addresses only works with the use of interfaces; in the reading interface, the IP address for the writing interface side must also be set.

IP addresses can only be used with FSoE communication.

The writing interface acts as an FSoE slave in the FSoE connection; the reading interface as the FSoE master. To ensure clear FSoE communication, the connection IDs and FSoE slave addresses must be unique. Normally, the connection ID is determined by the FSoE master (reading interface) and communicated to the FSoE slave. With the use of the IP address, the connection ID can now also be defined on the writing interface side (FSoE slave). With a selected allocation service for the configuration of an FSoE connection, the reading interface can request the Connection ID from the writing interface. The writing interface provides a connection ID from the allocated area for connection ID's; if all ID's are already assigned, no connection can be made.

7.7.1 Settings using the IP Address and Allocation Service

When using the allocation service for the Connection IDs, the Connection ID Service ("Using connection ID service") must be activated on the writing interface side; this service is activated in the property browser. False is set as the default value; if this flag is set to true, a space is automatically calculated for the allowed Connection IDs and displayed ("Range of connection ID's).

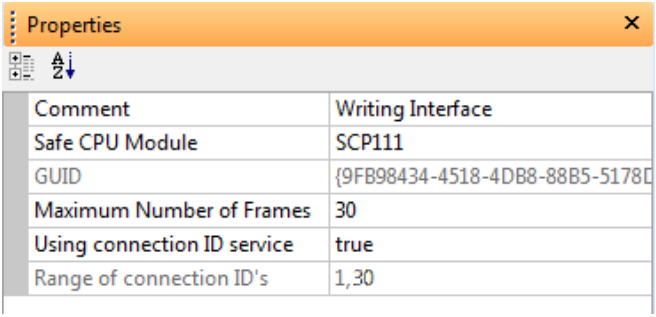

Fig. 64 PropertyBrowser

The range of the connection ID’s is calculated from the number of uses and the range allowed for the connection ID's of the project. The range is automatically calculated by the SAFETYDesigner and cannot be changed.

When exporting the writing interface, the flag for using the allocation service is written in addition to the existing data.

The flag for the allocation service is read from the reading interface and automatically included. The setting is shown in the PropertyBrowser (“Using connection ID service”) and cannot be changed by the user.

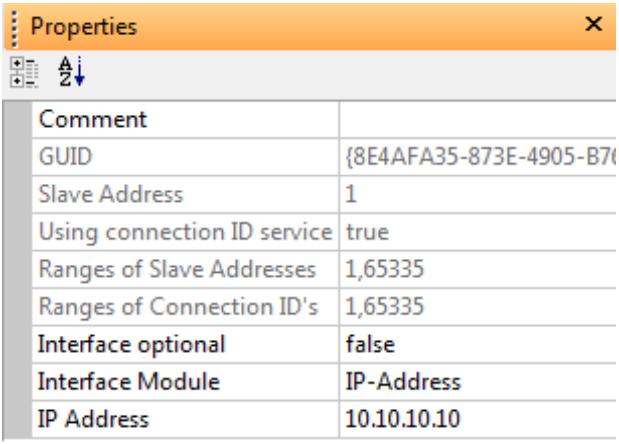

Fig. 65 PropertyBrowser

In the PropertyBrowser of the reading interface, the communication can be set through an IP address as an interface module using a Combobox. Until now, only PLC or coupler modules (e.g. VBC) were allowed as interfaces; if the IP address is set as the interface module, a property for the IP address ("IP-Address") is automatically displayed.

7.7.2 FSoE Dialog for Writing Interfaces

In the FSoE Connection Dialog, the range of Connection IDs for the writing interfaces is displayed, which can be used by the allocation service. The slave address is automatically assigned by the SAFETYDesigner, but can be changed by the user.

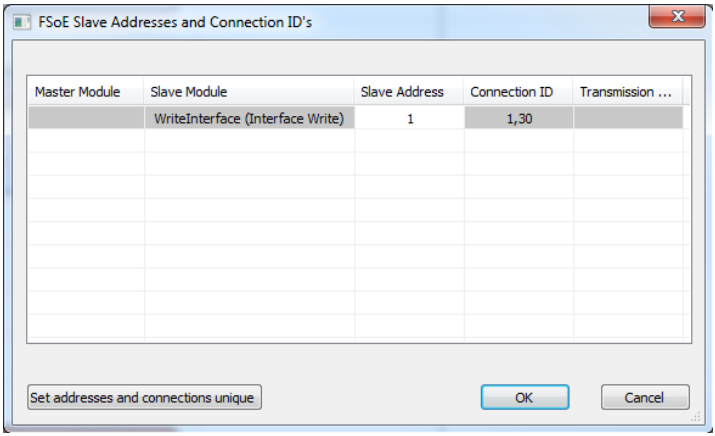

Fig. 66 FSoE Dialog for Writing Interfaces

7.7.3 FSoE Dialog for Reading Interfaces

When using the allocation service, it is no longer possible to set a connection ID with the reading interface. The user can set the transmission time; here, the maximum time allowed is 5000 ms.

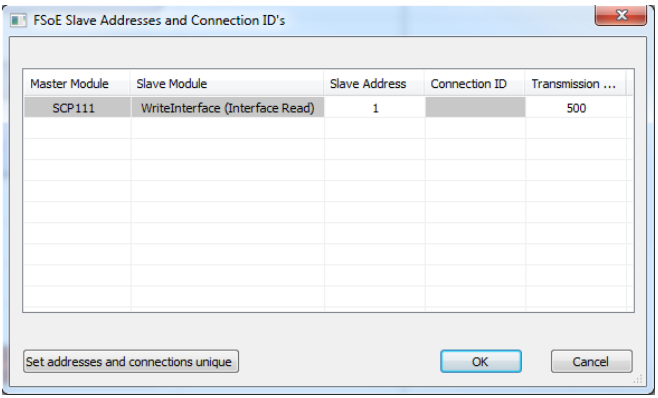

Fig. 67 FSoE Dialog for Reading Interfaces

7.7.4 Monitoring Settings for Reading Interfaces

With communication via IP addresses, it is no longer possible to calculate a transmission time for the reading interfaces. The user must determine and enter the time themselves.

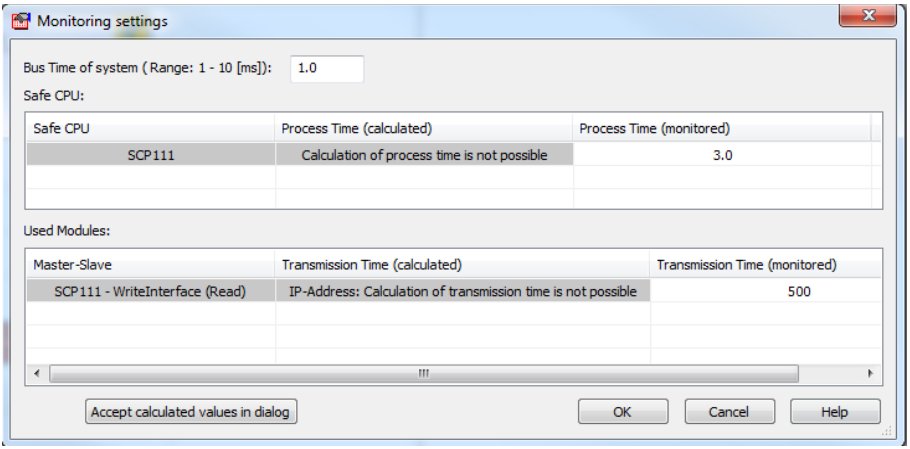

Fig. 68 Monitoring Settings for Reading Interfaces

The maximum age in reading interfaces can reach up to 5000 ms; since via WLAN, large time values can be assigned.

7.7.5 Determining the Maximum Transmission Time

For the reading interfaces, a maximum transmission time between the modules must be set. Automatic calculation via the SAFETYDesigner is not possible. Below, how the user can determine the time is explained.

Formula for determining the transmission time:

Time = FSoE slave cycle time (cycle time for writing interface)
+ Bus transmission time for writing interface
+ Time for the number of times the writing interface is used
+ Time for the number of reading interfaces
+ Additional time due to black channel (network quality, network load, roam ing effects, Standard CPU load …)

The cycle time of the FSoE slave, bus transmission time of the writing interface and the number of times the writing interface is used can be taken from the project of the writing interface. The user must determine the addition time resulting from the black channel based on the medium used and its quality.

Formula for determining the time for the number of times the writing interface is use:

Time = Number of times the writing interface is used
x 10 ms (time difference between sending two UDP packets)
(But at least 300 ms)

The time for the number of times the writing interface is used must be at least 300 ms, if the determined time is lower, 300 ms must be used for calculation. The value 300 ms results from the possibility that individual packets could fail during transmission via WLAN/Ethernet and therewith be resent multiple times. A maximum of two repetitions is allowed. The time difference between the repetitions is 100 ms.

Formula for determining the time for the number of reading interfaces:

Time = The number of reading interfaces in the project
x 10 ms (time difference between sending two UDP packets)

The time difference between sending two UDP packets is influenced by the cycle time setting in the HW control object (object in LASAL Class 2 project). The time is at least 10 ms, can extend beyond that depending on the setting.

7.7.5.1 Example for determining the transmission time

Assumed times used for all examples.

FSoE-Slave cycle time	=	1 ms
Bus transmission time for writing interfaces	=	3 ms
Black Channel	=	500 ms

In the examples, the transmission time for a reading interface is calculated in project R1.

7.7.5.2 Example 1

A writing interface is distributed to three projects, each with a reading interface.

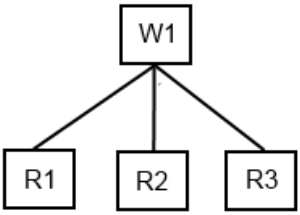

Fig. 69 writing interface distributed to three projects

Determining the time:

Time =		1	ms	(FSoE-Slave cycle time)
	+	3	ms	(Bus transmission time for writing interface)
	+	300	ms	(Time for number of writing interfaces)
	+	10	ms	(Time for number of reading interfaces)
	+	500	ms	(Black channel)

Transmission Time = sum of all times = 814 ms

7.7.5.3 Example 2

3 writing interfaces are distributed to one projects, with reading interfaces.

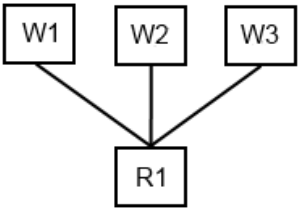

Fig. 70 3 writing interfaces distributed to one project

Determining the time:

Time =		1	ms	(FSoE-Slave cycle time)
	+	3	ms	(Bus transmission time for writing interface)
	+	300	ms	(Time for number of writing interfaces)
	+	30	ms	(Time for number of reading interfaces)
	+	500	ms	(Black channel)

Transmission Time = sum of all times = 834 ms

7.7.5.4 Example 3

Two writing interfaces are distributed to two projects, each with two reading interfaces.

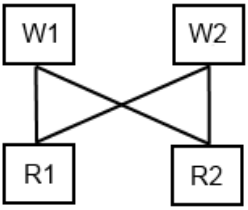

Fig. 71 2 writing interfaces distributed to two projects

Determining the time:

Time =		1	ms	(FSoE-Slave cycle time)
	+	3	ms	(Bus transmission time for writing interface)
	+	300	ms	(Time for number of writing interfaces)
	+	20	ms	(Time for number of reading interfaces)
	+	500	ms	(Black channel)

Transmission Time = sum of all times = 824 ms

7.7.5.5 Example 4

A writing interface is distributed to 50 projects, each with a reading interface.

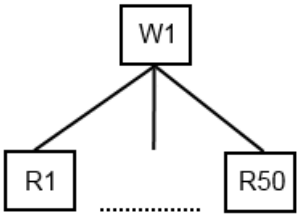

Fig. 72 writing interface distributed to 50 projects

Determining the time:

Time =		1	ms	(FSoE-Slave cycle time)
	+	3	ms	(Bus transmission time for writing interface)
	+	500	ms	(Time for number of writing interfaces)
	+	10	ms	(Time for number of reading interfaces)
	+	500	ms	(Black channel)

Transmission Time = sum of all times = 1014 ms

7.7.6 Advantages of the Allocation Service

Using the allocation service has the advantage that all Safety applications on the reading interface side can be identical, since the connection ID's are assigned on the writing interface side.

If no allocation service is used, the Safety applications on the reading interface side must be different. In each Safety application, a unique connection ID of the configuration of the FSoE connection with the writing interface must be entered. This connection ID is automatically assigned by the SAFETYDesigner (within the range for connection IDs in the project). The SAFETYDesigner can only perform testing for ID-uniqueness within the project. The uniqueness within all Safety applications must be performed by the user.

Advantages of the connection ID allocation service:

- With the allocation service, the user does not need worry about the uniqueness of the connection IDs (assumed by allocation service).
- With the allocation service, identical applications can be used on the reading side since no unique connection ID must be set.
  For an example of such a configuration, see the following graphic:

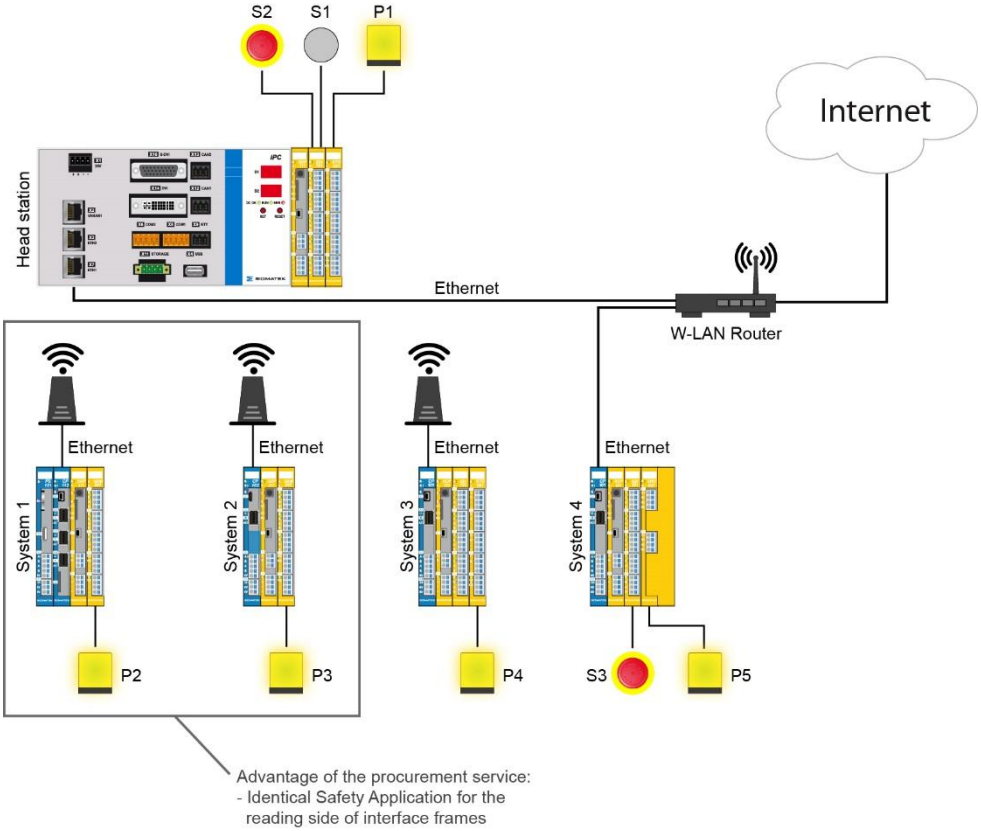

Fig. 73 Connection ID allocation service

7.8 Compatibility of S-DIAS Safety Modules

The following table shows the compatibility between the safety CPUs and the safety expansion modules. In addition, it indicates the minimum firmware version required by each safety CPU in order to support the respective expansion module. For example, the mixed module SDM 081 is not yet operational on an SCP 011 with firmware V334, but it is operational with V340.

SCP 211 FW	**SCP 111 FW**	**SCP 011 FW**	**Expansion Modules**								
			SDI101	SRO021	STO081	SSI021	SDM081	SIB061	SNC021	SRO022	SAI041
		from V334				*					
	from V423	from V340				*					
	from V429	from V352									
	from V447	from V370									
	from V458	from V377									
from V505	from V465										

Table 22: Compatibility between safety CPUs and safety expansion modules

***SSI 021 fully compatible only from V344 onwards; prior to that, the following restrictions apply:**
In the SSI absolute encoder module SSI 021, safe analog values (variables of type SAFEDINT) are generated. Normally, these SAFEDINT values are processed locally on the safety CPU to which the SSI 021 module is connected. If safe analog values (variables of type SAFEDINT) are transferred to another safety CPU and further processed there, an SCP 011 with firmware version V344 or higher MUST be used. The transfer of SAFEDINT variables takes place when, in projects with two or more safety CPUs, SAFEDINT values are placed in networks of a remote safety CPU, or when SAFEDINT values are used in interface frames (safe variables).

The following table shows from which Safety Designer version the safety modules are supported. For example, if an SCP 111 is required together with an SDM 081, a Safety Designer version from build 1353 onwards must be used (although SDM 081 itself would only require build 1187, the SCP 111 requires build 1353).

Safety-Designer	**Safety CPUs**			**Expansion Modules**								
	SCP011	SCP111	SCP211	SDI101	SRO021	STO081	SSI021	SDM081	SIB061	SNC021	SRO022	SAI041
from version	01.01.007	01.01.030	01.01.060	01.01.007	01.01.007	01.01.007	01.01.007	01.01.009	01.01.032	01.01.050	01.01.060	01.01.064
from build	1156	1353	2320	1156	1156	1156	1156	1187	1446	1767	2320	2964

Table 22: Compatibility between Safety Designer and Safety modules

Compatibility between SCPs:
The SCP 011 uses a different safety protocol for safe process data than the SCP 111 / SCP 211 and therefore cannot be used together with an SCP 111 / SCP 211. The SCP 111 and SCP 211 use the same safety protocol and can therefore be used together within a safety project.

Some SCP models are available in variants with a suffix (e.g. SCP011-1 or SCP111-S). This suffix has no influence on compatibility. For compatibility considerations, only the respective base model is relevant. An SCP111-S is therefore identical to an SCP111 with regard to compatibility. The same applies accordingly to SCP011 and SCP211.

7.9 Parameter Lists

7.9.1 Use of Parameter Lists

Parameter lists can be used to simplify the creation of similar machines. If the hardware and application are the same but the settings are different, these can be easily mapped using parameter lists. Only one project with different parameter lists needs to be created. The structure of the parameter lists is the same for all applications, and the values of the individual parameters can be changed as required. Only the parameter lists need to be exchanged to configure a machine differently. In addition, individual parameters can be adjusted during operation. This means that a machine configuration is created using SAFETYDesigner and the parameters are updated via the sequence configuration.

Parameter lists can only be used in SCP 211.

For more information on parameter lists, refer to the LASAL SAFETYDesigner description.

7.9.2 Creating and Using Parameter Lists

Parameter lists can be created in SAFETYDesigner.

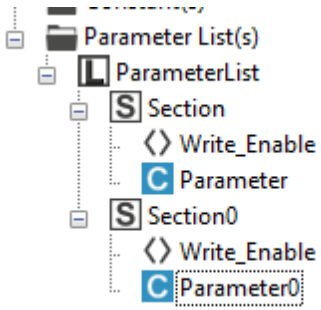

Parameter lists are a collection of parameters. Parameters are elements that are assigned a value. The structure of parameter lists is divided into sections. The parameters are created in the sections. Each section contains a “Write Enable.” This flag determines whether the parameters in a section can only be read or also written. Writable parameters can be changed during runtime.
The data type and value of a parameter can be set by the user.

Properties

Name	Parameter
Comment	
Value	false
Data Type	BOOL

The individual parameters can be used as constants in the networks.

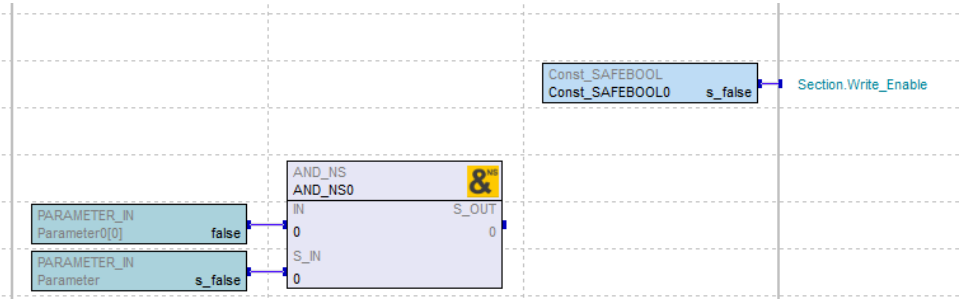

The parameter lists can be edited as a whole in SAFETYDesigner.

Edit Elements of ...

Parameter list 'ParameterList'

Element	Value
Section (Section)	
Parameter (1)	false
Parameter0 [0] (2)	false
Parameter0 [1] (3)	false
Parameter0 [2] (4)	false
Parameter0 [3] (5)	false
Parameter0 [4] (6)	false
Parameter1 (7)	false
Section0 (Section)	
Section1 (Section)	

Cancel OK

Multiple parameter lists can be created in the project. All parameter lists have the same structure. If the structure of one parameter list is changed, the other lists are automatically adjusted. The lists differ only in the values set.

If there are multiple parameter lists, one list is always active.

Properties

Name	ParameterList
Comment	
Revision Documentation	0.0
Active	true
Version	1

The values of the active list are always shown in the networks.
The user can activate a list via a context menu.

Set Parameter List Active

The parameter lists can be exported and imported from SAFETYDesigner using the context menu.

Import Parameter List... Export Parameter List...

During export, an additional machine-readable file is written. This file can be written to SCP 211 using a LASAL CLASS 2 application.

	INFO! The size of the parameter list is limited to 64 KB and 10,000 parameters.
	INFO! Der Aufbau der Parameterliste wir im Kompilat der Safety-CPU hinterlegt. Die Parameterliste ist kein Bestandteil des Kompilats. Die Parameterliste muss getrennt auf die Safety-CPU übertragen werden. Der SAFETYDesigner übernimmt dies automatisch beim Übertragen des Kompilats der Safety-CPU.

7.9.3 Updating the Parameter List at Runtime

This section describes how the parameter list can be changed at runtime. There are three different types:

- **Change to the entire parameter list:** In this case, a new parameter list can be imported at runtime, which is accepted after confirmation and activated in the next cycle. If the list is to be saved permanently, this can be done either before or after activation.
- **Changes to individual sections:** It is possible to change only individual parts of the parameter list. To do this, the parameters to be changed must be grouped together in a subarea, which can then be replaced at runtime as before and activated in the next cycle after confirmation. Here, too, the changed list can be saved permanently.
- **Changing individual parameters in Force mode:** To be able to change individual parameters directly as required (e.g. when developing the safety application or making adjustments to the machine), the existing force functionality is used for the parameter list. In this mode, individual parameters can be overwritten immediately and without verification. However, the values cannot be saved permanently.

	INFO! All three procedures can be performed without SAFETYDesigner and via the LASAL CLASS 2 application. For more information on exchanging parameter lists, refer to the description of LASAL CLASS 2.

Procedure for exchanging the parameter list or a subarea of the parameter list via a LASAL CLASS 2 application:

1. **Logging on to the safety CPU:** To send the following commands to the safety CPU, you must first log on to the safety CPU with a password (config level).
2. **Activating parameterization mode:** Before the parameter list can be exchanged, the safety CPU must be put into parameterization mode.
3. **Transferring the parameter list or the subrange:** The parameter list can now be sent to the Safety CPU in binary form. To do this, virtual addresses are used to write to the temporary parameter list.
4. **Check the parameter list:** Once the transfer is complete, the validity of the modified parameter list must be checked. To do this, the total CRC of the parameter list must be sent to the safety CPU as a parameter with this command. The safety CPU then calculates the total CRC of the temporary parameter list, compares it with the CRC received, and returns the result. If the comparison is successful, the temporary parameter list is marked as valid.
5. **Activating the new parameters:** Once the parameter list has been successfully checked, the temporary parameter list can be copied to the active parameter list. After this command is sent, the safety application uses the new parameter list in the next cycle.

The parameter list can then be permanently saved (regardless of whether it was previously activated). This causes the temporary parameter list to be written to the external flash in the safety CPU.

Please note that activation or saving only works if the corresponding enable signals are also set. Outside the operational state of the safety CPU, the enable signals are not checked because the safety application is not executed in all other states.

The parameterization mode must be exited at the end. However, the mode is only exited if the temporary parameter list matches the list in the external flash (if there has been no change, the change has been saved in the external flash, or the temporary parameter list has been restored). If a difference is detected, an error code is returned.

	INFO! Any changes to the parameter list, parameters, or subranges of parameter lists on a safety CPU must be logged by the user. The log must contain the changed parameters/subranges, the safety number of the safety CPU, and the person and date (reference to verification activity in accordance with EN 62061, Section 6.11.2.5).

8 MDD 2000 (DIAS DRIVE 2000)

General Description

The DIAS-Drive 2000 series includes mains/axis modules and axis modules for a mains input voltage of 400/480 V AC. The system is currently available in 2 different sizes. In the following document, the devices of the MDP/MDD 21XX series are referred to as "Size 1", devices of the MDP/MDD 22XX series as "Size 2". Up to 3 servo amplifiers are integrated in the mains/axis modules (MDP) and in the axis modules (MDD). Several axis modules can be supplied with one mains/axis module.
The DIAS-Drive 2000 is a complete servo drive system, small to medium power, which can also be used for applications with high control quality. It is fully integrated into the LASAL development environment. The mains/axis module and the axis modules are mounted directly on the control cabinet wall. No mounting plate is required.
The current, speed and position control operates with a cycle time of 62.5 µs. DIASDrive 2000 has a high flexibility in connecting to different feedback systems. VARAN connects the drive system with the machine control.

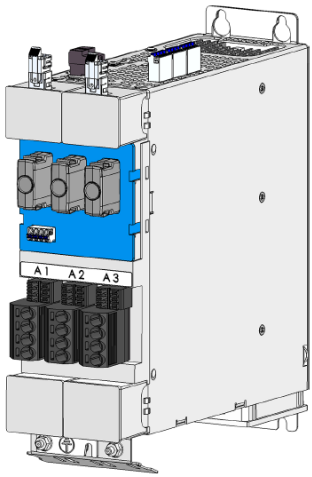

Size 1

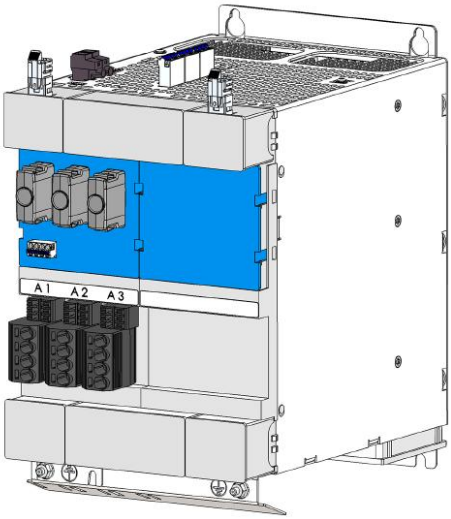

Size 2

8.2.1 Designated Use

The Power Drive Systems (PDS) of the DIAS-Drive 2000 series are exclusively intended for use in the control cabinet with the power supply/axis modules of the same series. Together, they are installed as components in electrical equipment and machines and can only be operated with these systems. The safety functions are intended for use in safety-related applications (functional safety) and meet all necessary requirements for safe operation in accordance with EN 62061, EN ISO 13849-1/2 and EN 61800-5-2. The safety integrity levels (SIL), performance levels (PL) achieved differ depending on the type of encoders used, use of the safe inputs with/without clock output for cross-circuit detection, single-channel or dual-channel, etc.
Please note the applicable EG type-examination certificates (TÜV certificate).

8.2.2 System Requirements

The use of the MDD2000 requires at least the following system requirements:
Salamander OS: 09.01.140 of higher
Hardware class version: 1.0 or higher
Motion version: 1.0 or higher
SAFETYDesigner version: 01.01.070 or higher

The DIAS-Drive 2000 can only be operated with a functional PLC (e.g. CP 112) with a Salamander operating system.

8.2.3 Encoder

To be able to use safety functions that require a safe position, speed or acceleration (e.g. SLS), one of the following Hiperface DSL Safety encoders must be used and configured accordingly:

Encoder	Base for safety functions	Safe relative position	Safe absolute position*	Safe speed	Safe acceleration
EKx36	Safe Increment	yes	no	yes	yes
EFx50	Safe Increment	yes	no	yes	yes
EDx35	Safe Increment, Safe Singleturn Absolute Position	yes	only one rotation	yes	yes
EEx37	Safe Increment, Safe Singleturn Absolute Position	yes	only one rotation	yes	yes

* The information refers to a non-referenced axis. All the encoder types listed are available as multiturn encoders, but only supply the multiturn position in a function-related manner. The full multiturn resolution of the encoder can only be used as a safe absolute position after absolute position referencing has been carried out. Referencing must be carried out each time the machine is started and is not saved remanently.

	The resolution of the encoder may not exceed 32 bits.

8.2.4 Safety Functions

The MDD2000 has the following safety functions.

Stopp functions	
STO	Safe Torque Off
SS1	Safe Stop 1
SS2	Safe Stop 2
SOS	Safe Operating Stop
SBC	Safe Brake Control
Limitation functions	
SLS	Safely-limited Speed
SLP	Safely-limited Position
SLA	Safely-limited Acceleration
SLI	Safely-limited Increment
SDI	Safe Direction
Monitoring functions	
SMS	Safe Maximum Speed
SMA	Safe Maximum Acceleration
SSM	Safe Speed Monitor
SCA	Safe CAM
Restart & Error Acknowledge	
Restart Acknowledge	Starting the drive after stop function
Error Acknowledge	Acknowledge an error

The safety functions are parameterized in the SAFETYDesigner. The description of the safety functions and the individual parameters of the safety function can be found in the SAFETYDesigner help.

8.2.5 Function-related Control of the Drive

The function-related control of the drive and the axes is done via a LasalClass2 application. The user can create the application in LasalClass2. The company SIGMATEK supports the user with ready-made hardware classes and libraries (e.g. Motion Library). The basic settings of the drive are also integrated in the LasalClass2 development environment. The DiasDrive area in LasalClass2 deals with the configuration and tuning of drive hardware modules, which are integrated into a control system via VARAN bus, up to the integration of drive information into a LasalClass2 application. The description for creating an application can be found in the documentation of the development environment LasalClass2, as well as in the documentation of the hardware classes and libraries.

8.2.6 Standalone Operation

The MDD2000 can be used in standalone mode.

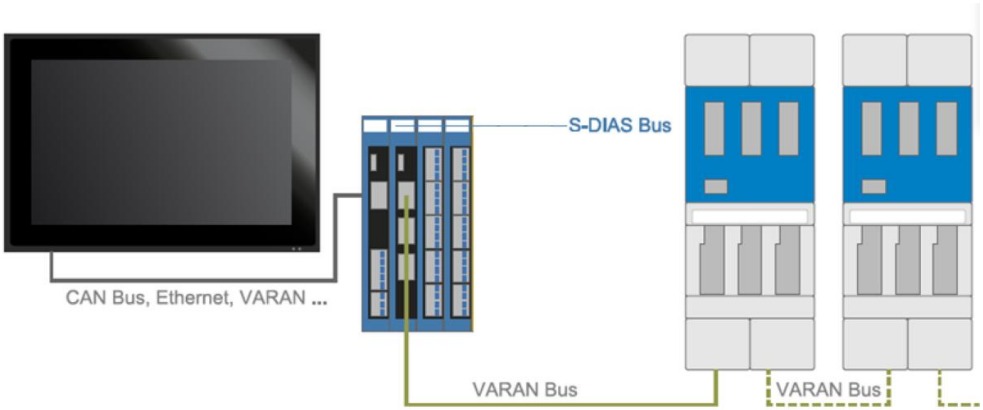

Example standalone

The safety functions of the drive are activated here via the 4 safe inputs of the drive. The mapping setting can be either single channel or dual channel. The mapping is set via the SAFETYDesigner. The safety functions are also parameterized in the SAFETYDesigner. The created configuration can be loaded to the drive via a PLC (e.g. CP112) by the SAFETYDesigner. The description can be found in the SAFETYDesigner help.

Single channel and two channel input mapping must not and cannot be used together.
All axes of an MDD2000 can only be operated with the same type of input mapping.

8.2.7 Operation with a Safety CPU

The MDD 2000 can be used together with a safety CPU (e.g. SCP111).

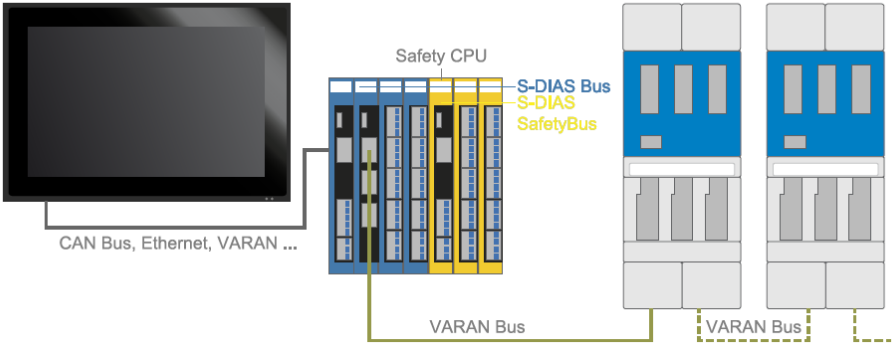

Example general overview

Communication between the drive and the safety CPU takes place via FSoE. The safety functions of the drive are activated here via safe outputs of the axes. The outputs (e.g. Safe_Function1 for the axes) are transmitted to the drive via FSoE communication. The mapping is set via the SAFETYDesigner. The safety functions are also parameterized in the SAFETYDesigner. The created configuration is transferred to the drive via the safety CPU. For this, the SAFETYDesigner loads the configuration to the used safety CPU. The description can be found in the SAFETYDesigner help.

Mixing the activation of the safety functions between safe inputs and the use of a safety CPU is not possible.

8.2.8 Verifying the Encoders

It is necessary to verify the encoders on the 3 axes. Until the verification is completed, the drive runs only in a temporary operational mode. This setting is temporary. The time can be set in the SAFETYDesigner (5-480 min). The setting is made in the PropertyBrowser at "Temporary Operation Time in Minutes".

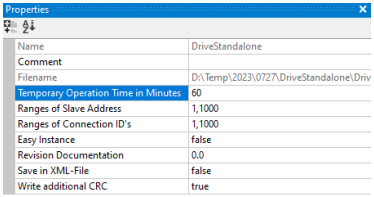

Properties	
Name	DriveStandalone
Comment	
Filename	D:\Temp\2023\0727\DriveStandalone\Driv
Temporary Operation Time in Minutes	60
Ranges of Slave Address	1,1000
Ranges of Connection ID's	1,1000
Easy Instance	false
Revision Documentation	0.0
Save in XML-File	false
Write additional CRC	true

After the set time has elapsed, the drive falls into an error and must be restarted.

During the temporary operational mode, the drive can only be operated at a limited speed. The speed must be set at the axes of the drive.

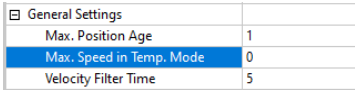

General Settings	
Max. Position Age	1
Max. Speed in Temp. Mode	0
Velocity Filter Time	5

During the temporary operational mode the monitoring functions (e.g. SMS) are not executed.

.

Verification Procedure

Verification is triggered from the functional application. SIGMATEK provides ready-made blocks (e.g. MDD2000_Axis) for this purpose. The specified procedure must be followed. For details see the documentation of the classes and the Motion library.

Block for verifying the axes

Process

- Drive runs in Temporary Operational Mode
- Reset of the verification (if an encoder is already validated)
- Verifying axis 1
- Verifying axis 2
- Verifying axis 3
- Set drive to SERVICE mode
- Finalization of the verification
- Starting the drive
- Drive runs in operational mode

The drive stores the serial number of each encoder after verification. In addition, an ID is stored in the encoder. The drive checks the serial number and ID periodically to detect encoder replacement.

8.2.9 Referencing the Absolute Position

For the safety function SLP (Safely Limited Position) an absolute position of the encoders is required. To determine the absolute position, a reference run of the motors must be performed. Referencing is triggered from the functional application. SIGMATEK provides ready-made blocks (e.g. MDD2000_AxisSafeInfo) for this purpose. The specified procedure must be followed. For details see the documentation of the classes and the Motion library.

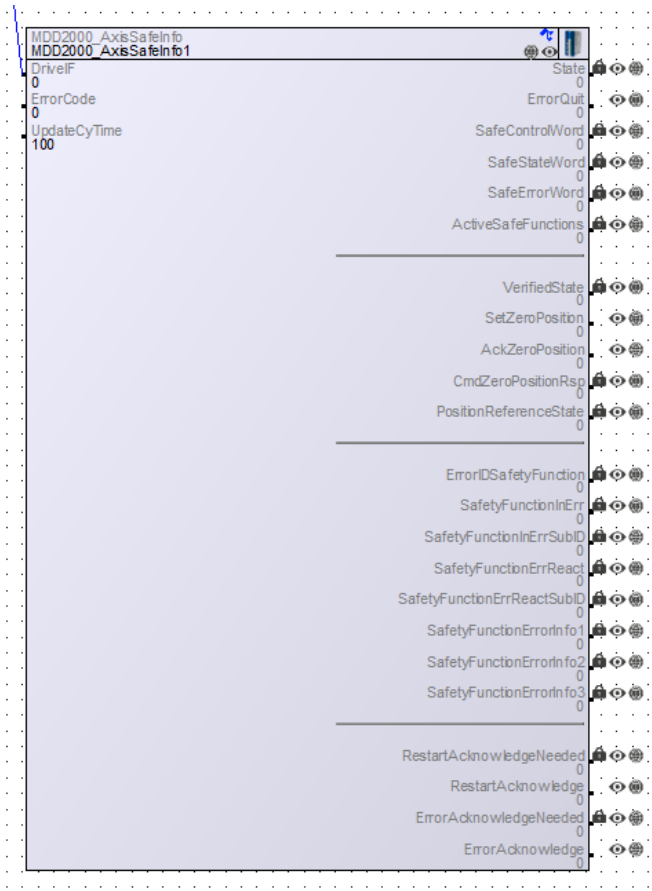

Block for referencing the axis

In the SAFETYDesigner, additional parameters must be set for the axes that provide specifications for referencing.

⊟ Position Reference	
Min. Position Change	0
Position tolerance	0

Referencing Procedure

- Approach zero position
- Setting the zero position
- Moving the axis by the set value (Min. Position Change)
- Approach zero position, value must be in the set tolerance window (Position tolerance)
- Finalizing the referencing
- Starting the drive

Referencing is dependent on the encoders, see chapter 8.2.3.

If referencing is not performed or is performed incorrectly, this can lead to damage to the machine.

8.2.10 Procedure for Commissioning a Drive in Standalone Mode (without safety CPU)

Certain procedures must be followed when commissioning the drive with safety functionality.
The drive must be configured both functionally and safety-wise. The functional configuration is done via the LaslClass2 development environment. The safety configuration is done via the SAFETYDesigner. After configuring the drive, the encoders, the configurations and the machine must be tested for function. After this procedure, the verification of the encoders and drives can be performed. These steps must be documented. The protocol should at least list the name of the person performing the work, the date and the steps performed.

Work steps function-related

- Creating the application for the drive in LasalClass2
- Creating the drive configuration (e.g. regulator parameters) in LasalClass2
- Importing the data to the control via the tool LasalClass2

Work steps safety
- Creating the configuration in the SAFETYDesigner
- Importing the data to the drive (via SAFETYDesigner)

Initial Startup

- Starting the drive (runs in temporary operational mode)
- Testing the encoders for functionality
- Referencing the absolute position (if necessary)
- Testing the function-related application
- Testing the safety-related application and machine
- Verifying the encoders
- Drive runs in operational mode

8.2.11 Sequence of Commissioning a Drive with a Safety CPU

Certain procedures must be followed when commissioning the drive with safety functionality.
The drive must be configured both functionally and safety-wise. The functional configuration is done via the LaslClass2 development environment. The safety configuration is done via the SAFETYDesigner. After configuring the drive, the encoders, the configurations, the safety CPU and the machine must be tested for function. After this procedure, the verification of the encoders, the drive and the safety CPU can be performed. These steps must be documented. The protocol should at least list the name of the person performing the work, the date and the steps performed.
The commissioning of the safety side can be seen in two steps. First, the Safety CPU is loaded. The configuration of the safety CPU contains the data for the drive. The mechanism is the same as with two safety CPUs. The safety CPU acts as the "Sigmatek Master" and the Drive as the "Sigmatek Slave". The safety CPU establishes a connection to the drive after startup. The safety CPU sends the configuration to the drive. After that, the drive is seen as configured and can be verified and referenced (triggering from application via the functional FW part, defined procedure). The drive runs in temp. OP mode until verification/referencing is completed. After verification/referencing the drive runs in OP mode.

The safety CPU establishes a FSoE connection to the drive and runs in temp. OP mode from this moment on. The data can be exchanged. The Safety CPU must be validated by the user and then runs in OP mode. This may only be done after the drive has been verified.

Work steps function-related

- Creating the application for the drive in LasalClass2
- Creating the drive configuration (e.g. regulator parameters) in LasalClass2
- Importing the data to the control via the tool LasalClass2

Work steps safety

- Creating the configuration with a drive and a safety CPU in SAFETYDesigner
- Importing the data to the safety CPU (via SAFETYDesigner)

Initial Startup

- Start the system (LASAL application must run correctly, start safety CPU).
- Establishing the connection between safety CPU and drive
- Safety CPU checks CRC of the configuration on the drive
- Distributing the configuration to the drive if CRC on drive and safety CPU do not match
- Starting the drive (runs in temporary operational mode)
- Testing the encoders for functionality
- Referencing the absolute position (if necessary)
- Testing the functional application
- Testing the safety application
- Testing the machine
- Verifying the encoders
- Verifying the safety CPU

8.2.12 Procedure Encoder Exchange

When replacing the encoder, the drive must be set to SERVICE mode; if this is not done, the drive generates an error when unplugging an encoder.

The safety part of the drive recognizes the encoder exchange (if encoder ID/serial number on the drive is not correct). The serial number of the encoder is checked here and a note is given to the user.

Case with Safety CPU

The encoder exchange is not recognized by the safety CPU, thus the safety CPU cannot react. It is recognized by the Safety CPU that the connection to the drive is interrupted because the drive is in SERVICE mode. The FSoE watchdog has expired. With optional drives an Errors of channels is generated in the safety CPU, otherwise an error. The SCP always remains in operational mode. The safety CPU generates a message if the FSoE connection fails.

The drive must be recommissioned after the encoder has been replaced. All encoders must be re-verified. The user is obliged to re-verify the drive here. If the replaced encoder was referenced, this must be done again. These steps must be documented. The protocol should at least list the name of the person performing the work, the date and the steps performed.

Process

- Set drive to SERVICE mode
- Exchange encoder
- Perform encoder verification reset
- Starting the drive (runs in temporary operational mode)
- Testing the encoder for functionality
- Referencing the absolute position (if necessary)
- Testing the functional application
- Testing the safety application
- Testing the machine
- Verifying the encoders

8.2.13 Procedure for Exchanging a Drive

When exchanging the drive, a distinction must be made between standalone use and use with a safety CPU.
When using the device in standalone mode, the complete commissioning procedure must be carried out as described in chapter 8.2.11.
When used with a safety CPU, the procedure is different from that for initial commissioning. The safety CPU can detect at startup that the drive with the safety number is no longer present in the system (safety number stored in safety CPU). The safety CPU generates an error message, or if the drive is optional, the safety CPU continues to run in Operational Mode and generates an Error of Channels. The error can be read in the SAFETYDesigner. The user must now trigger a RESCAN on the system (command from SAFETYDesigner) so that the safety CPU can read the safety number of the new drive. The safety CPU falls back into the temp. operational mode.

The commissioning procedure must be performed again (verify and reference drive; validate safety CPU)

The user is obliged to re-verify the drive. This must be recorded in a protocol.

The SafetyCPU must be validated. This may only be done after the drive has been verified.

Process:

- Safety CPU detects other drive (via safety number of the drive)
- Safety CPU generates an error or an error of channels
- Trigger RESCAN command on the Safety CPU (e.g. via SAFETYDesigner)
- Safety CPU detects new drive and distributes configuration
- Starting the drive (runs in temporary operational mode)
- Testing the encoders for functionality
- Referencing the absolute position (if necessary)
- Testing the function-related application
- Testing the safety-related application and machine
- Verifying the encoders
- Validating the safety CPU

8.2.14 Procedure Exchange of a Safety CPU

The procedure on the safety CPU is the same as for initial commissioning.

The safety CPU checks the CRC of the configuration at the drive and transfers the configuration to the drive in case of differences.

The drive must be re-verified/referenced if the configuration is changed, otherwise not. This must be recorded in a protocol.

The SafetyCPU must be validated.

Process

- Importing the data to the safety CPU (via SAFETYDesigner)
- Establishing the connection between safety CPU and drive
- Safety CPU checks CRC of the configuration on the drive
- Distributing the configuration to the drive if CRC on drive and safety CPU do not match
- Starting the drive (runs in temporary operational mode if drive has been reconfigured)
- Testing the encoders for functionality
- Referencing the absolute position (if newly configured)
- Testing the functional application
- Testing the safety application
- Testing the machine
- Verifying the encoders (if newly configured)
- Validating the safety CPU

8.2.15 Brake Test

When using a brake, test it regularly.
There is a function SBT (Safe Brake Test) for this purpose. The function is to be regarded as a function-related diagnostic function for a safe brake. The function can be parameterized in the SAFETYDesigner. See the documentation in the SAFETYDesigner.

	The countdown for monitoring the SBT test frequency is reset each time the machine is restarted. The user must ensure that testing is carried out regularly.

The brake test is called from the functional application. SIGMATEK provides ready-made blocks (e.g. class MDD2000_AxisSafeBrakeTest) for this purpose. The specified procedure must be followed. For details see the documentation of the classes and the Motion library.

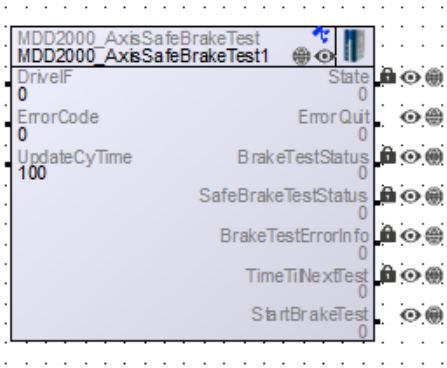

Block for brake test

8.2.16 Example of Creating a Configuration in Standalone Mode

As an example, a simple setup with one CPU and one drive is explained.

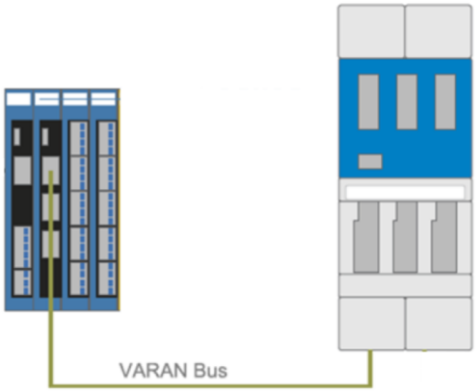

For this purpose, an application is created in the LasalClass2 development environment. The application contains the hardware structure and the functionality required by the user to operate the functional area of the drive.

Structure of the HW tree:

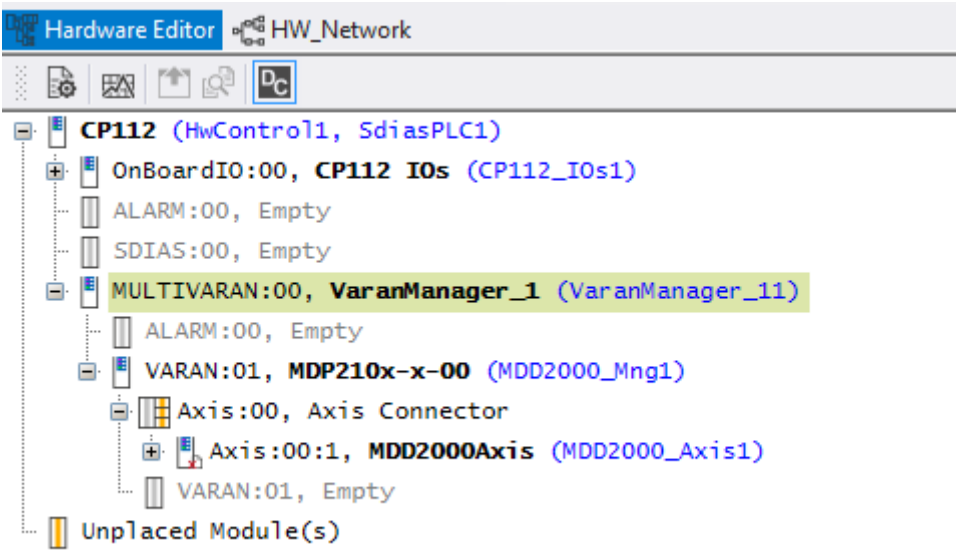

Structure of the hardware network:

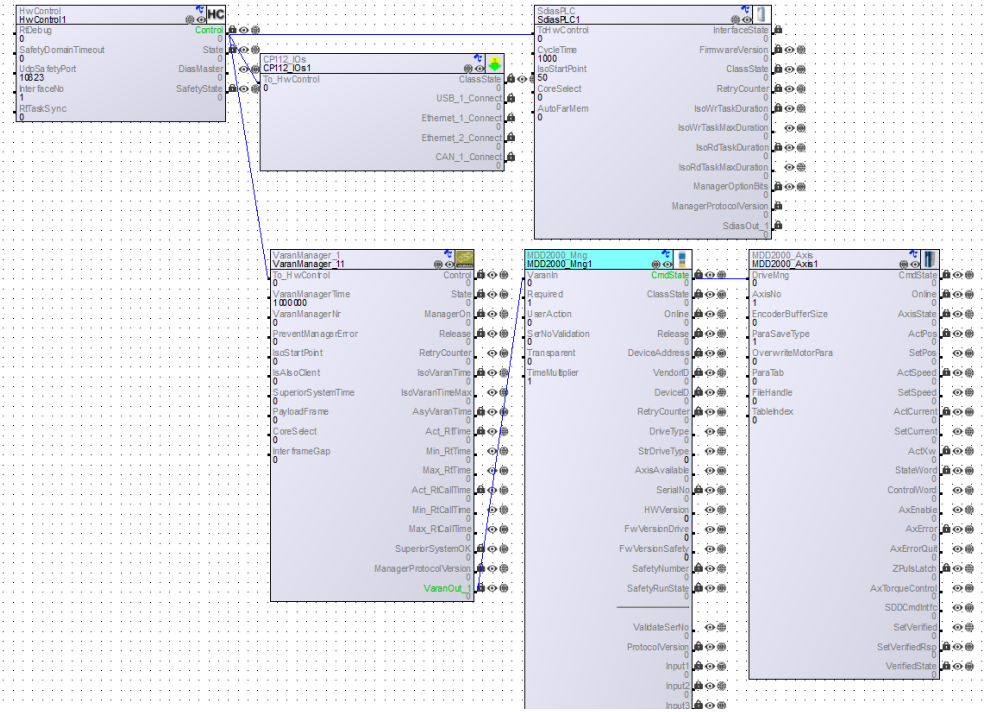

In the SAFETYDesigner, the configuration of the drive must be created from a safety point of view. For this purpose, a project with the corresponding hardware tree and the parameterization of the axes with the safety functions must be carried out.

Structure of the HW tree:

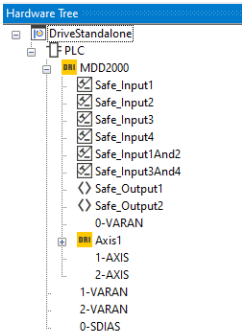

After the hardware setup has been created, the parameterization of the axes can be started. Here, the general settings for the encoder must first be carried out. These are, for example, which encoder type is used, which resolutions does the encoder have, and what is the maximum speed allowed in temp. operational mode.

General settings

⊟ Axis Configuration	
Encoder Type	HIPERFACE DSL
Material Number	0
⊟ Encoder Configuration	
Encoder Resolution1	18
Encoder Resolution2	9
Rotations	1
Position Difference	2
⊟ General Settings	
Max. Position Age	1
Max. Speed in Temp. Mode	20
Velocity Filter Time	5
⊞ Position Reference	
⊞ Position Conversion	

In addition, you can define which units are to be used.

Units:

⊟ UNIT	
Time unit	ms
Position unit	inc
Velocity unit	rev/min
Acceleration unit	Velocity_unit/s
Current unit	mA

After the general settings, the safety functions can be parameterized. This can be done either in the Property Browser or View.

Selected Axis: 0: Axis1 Selected Function: Safely-limited Speed

STO | SS1 | SS2 | SOS | SBC | SBT | SLS | SLP | SLA | SLI | SDI | SMS | SMP | SMA | SSM | SCA | Mapping

	SLS_1	SLS_2	SLS_3	SLS_4	SLS_5	SLS_6	SLS_7	SLS_8	Units
Time Velocity	25	0	0	0	0	0	0	0	ms
Upper Limit	0	0	0	0	0	0	0	0	rev/min
Lower Limit	0	0	0	0	0	0	0	0	rev/min
Time Velocity Limit	0	0	0	0	0	0	0	0	ms
Time Deceleration	0	0	0	0	0	0	0	0	ms
Deceleration Limit	0	0	0	0	0	0	0	0	rev/min/s
Error Reaction	STO	STO	STO	STO	STO	STO	STO	STO	
Function Mapping									
Status Word									

SLS time for velocity monitoring

The parameters for the individual functions can be set here. A short help text is displayed for each parameter. The values entered are automatically checked for validity.
There are 16 functions available on the drive per axis for processing. The safety functions can be assigned to these 16 functions (function mapping).
These 16 functions can be triggered via the 4 safe inputs of the drive.

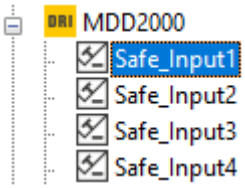

The functions can be assigned to the inputs either single-channel or dual-channel. The settings can be made in the Property Browser.

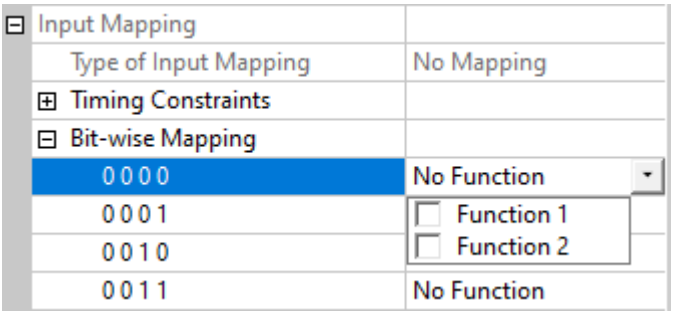

After completing the parameterization, the application can be loaded onto the drive via the Safety Designer. The procedure is similar to a safety CPU. There is a login to the drive with a subsequent download of the application.

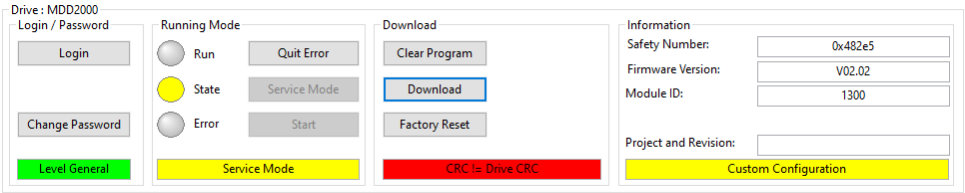

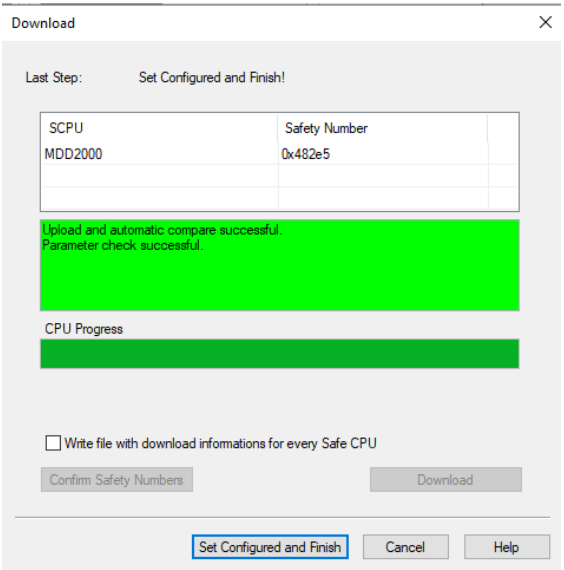

After successful download, the drive can be started.

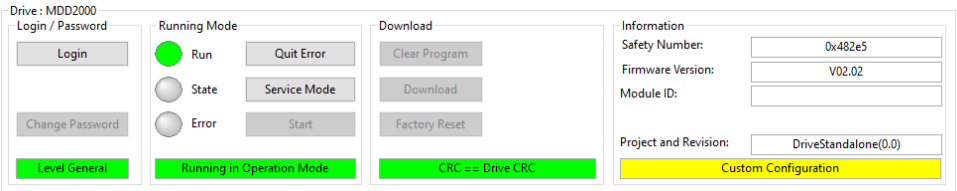

In the hardware tree the values of the inputs can now be displayed.

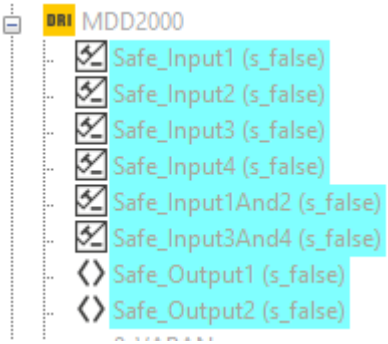

The encoders can now be verified and referenced from within the functional application.
The encoders can now be verified and referenced from within the functional application.
The verification of the encoders is done via the instance of the MDD200_Axis class in the function-related application. The server 'SetVerified' must be set to 1 for this purpose. The server 'VerifiedState' indicates whether the encoder is verified.
The referencing of the absolute position is done via the instance of the MDD2000_AxisSafeInfo class in the function-related application.

8.2.17 Example for Creating a Configuration Together with a Safety CPU

As an example, a simple setup with one CPU, one safety CPU and one drive is explained.

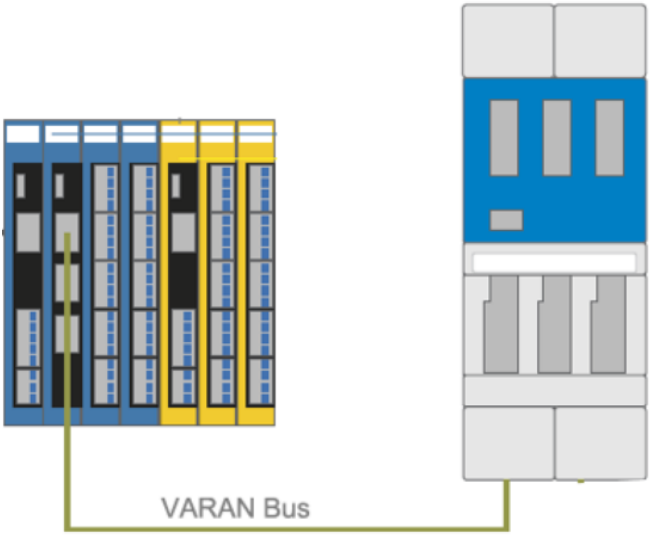

For this purpose, an application is created in the LasalClass2 development environment. The application contains the hardware structure and the functionality required by the user to operate the functional area of the drive.

Structure of the HW tree:

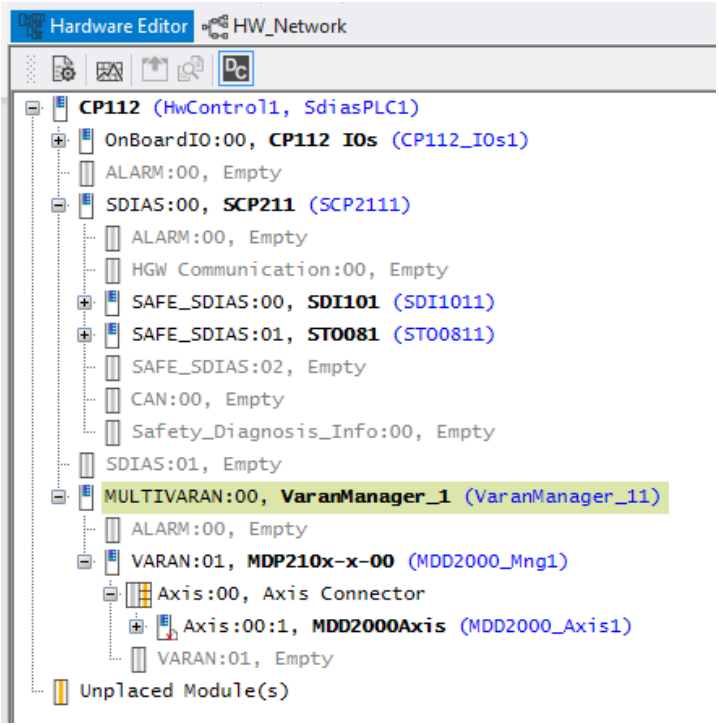
Hardware Editor
HW_Network
CP112 (HwControl1, SdiasPLC1)
OnBoardIO:00, CP112 IOs (CP112_IOs1)
ALARM:00, Empty
SDIAS:00, SCP211 (SCP2111)
ALARM:00, Empty
HGW Communication:00, Empty
SAFE_SDIAS:00, SDI101 (SDI1011)
SAFE_SDIAS:01, STO081 (STO0811)
SAFE_SDIAS:02, Empty
CAN:00, Empty
Safety_Diagnosis_Info:00, Empty
SDIAS:01, Empty
MULTIVARAN:00, VaranManager_1 (VaranManager_11)
ALARM:00, Empty
VARAN:01, MDP210x-x-00 (MDD2000_Mng1)
Axis:00, Axis Connector
Axis:00:1, MDD2000Axis (MDD2000_Axis1)
VARAN:01, Empty
Unplaced Module(s)

Structure of the hardware network:

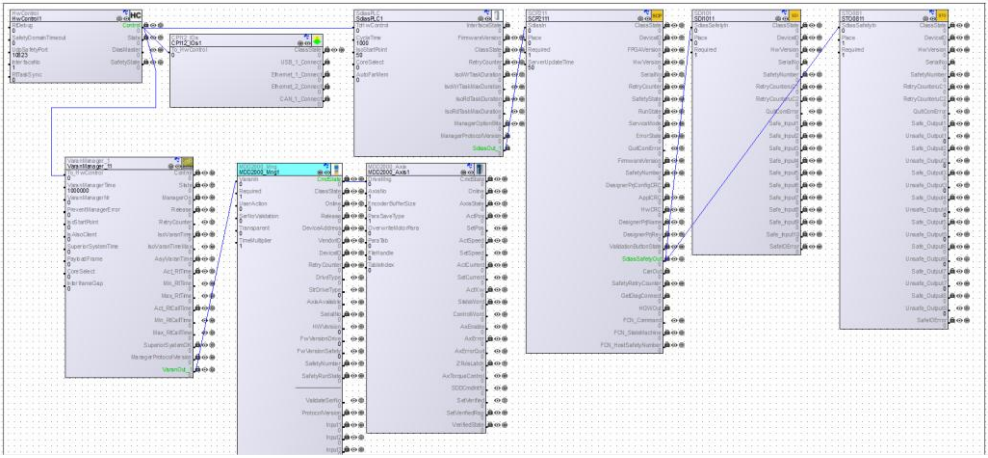

In the SAFETYDesigner, the configuration of the drive must be created from a safety point of view. For this purpose, a project with the corresponding hardware tree and the parameterization of the axes with the safety functions must be carried out.

Structure of the HW tree:

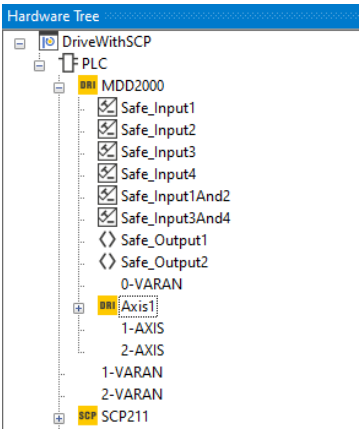

After the hardware setup has been created, the parameterization of the axes can be started. Here, the general settings for the encoder must first be carried out. These are, for example, which encoder type is used, which resolutions does the encoder have, and what is the maximum speed allowed in temp. operational mode.
General settings

⊟ Axis Configuration	
Encoder Type	HIPERFACE DSL
Material Number	0
⊟ Encoder Configuration	
Encoder Resolution1	18
Encoder Resolution2	9
Rotations	1
Position Difference	2
⊟ General Settings	
Max. Position Age	1
Max. Speed in Temp. Mode	20
Velocity Filter Time	5
⊞ Position Reference	
⊞ Position Conversion	

In addition, you can define which units are to be used.

Units:

⊟ UNIT	
Time unit	ms
Position unit	inc
Velocity unit	rev/min
Acceleration unit	Velocity_unit/s
Current unit	mA

After the general settings, the safety functions can be parameterized. This can be done either in the Property Browser or View.

Selected Axis: 0: Axis1 Selected Function: Safely-limited Speed

STO | SS1 | SS2 | SOS | SBC | SBT | SLS | SLP | SLA | SLI | SDI | SMS | SMP | SMA | SSM | SCA | Mapping

	SLS_1	SLS_2	SLS_3	SLS_4	SLS_5	SLS_6	SLS_7	SLS_8	Units
Time Velocity	25	0	0	0	0	0	0	0	ms
Upper Limit	0	0	0	0	0	0	0	0	rev/min
Lower Limit	0	0	0	0	0	0	0	0	rev/min
Time Velocity Limit	0	0	0	0	0	0	0	0	ms
Time Deceleration	0	0	0	0	0	0	0	0	ms
Deceleration Limit	0	0	0	0	0	0	0	0	rev/min/s
Error Reaction	STO	STO	STO	STO	STO	STO	STO	STO	
Function Mapping									
Status Word									

SLS time for velocity monitoring

The parameters for the individual functions can be set here. A short help text is displayed for each parameter. The values entered are automatically checked for validity.
There are 16 functions available on the drive per axis for processing. The safety functions can be assigned to these 16 functions (function mapping).
These 16 functions are represented by outputs at the axes and can be activated in the safety CPU. The activation is done by placing the outputs in a network of the safety CPU. The information is transmitted from the safety CPU to the drive via an FSoE connection.

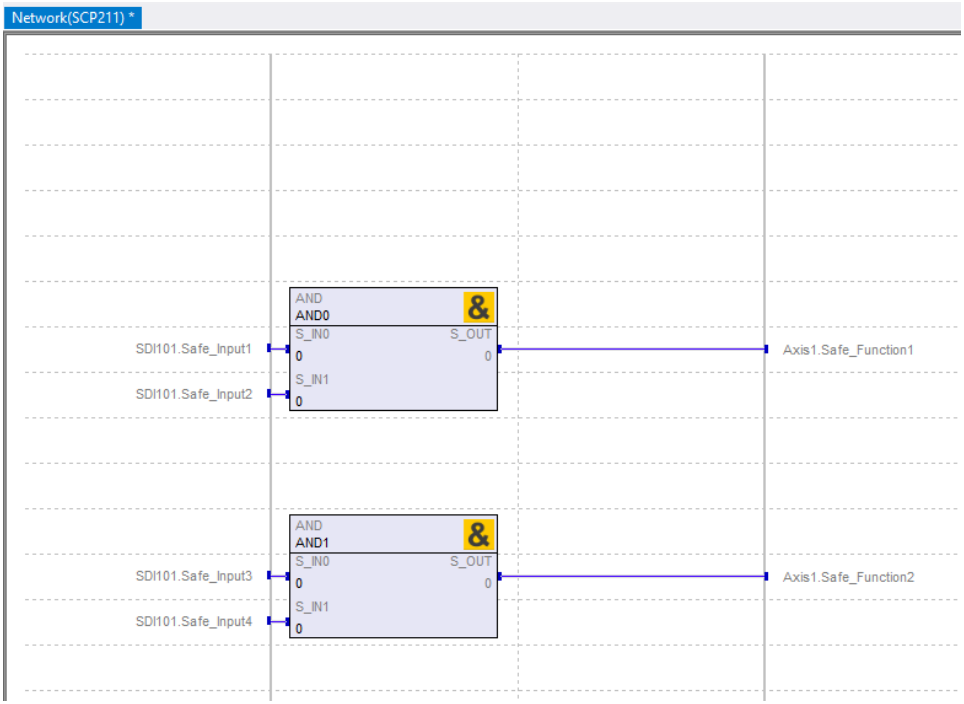

After completing the parameterization, the application can be loaded onto the safety CPU via the SAFETYDesigner. A login to the safety CPU with a subsequent download of the application takes place.

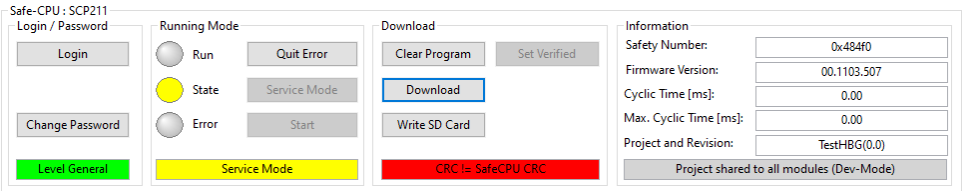

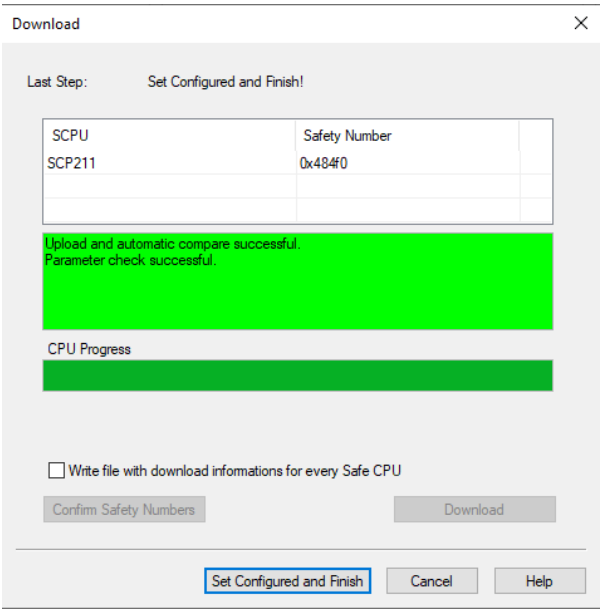

After successful download the safety CPU can be started. The application is transmitted to the drive. The drive can then be started.
The encoders can now be verified and referenced from within the functional application. The verification of the encoders is done via the instance of the MDD200_Axis class in the function-related application. The server 'SetVerified' must be set to 1 for this purpose. The server 'VerifiedState' indicates whether the encoder is verified.
The referencing of the absolute position is done via the instance of the MDD2000_AxisSafeInfo class in the function-related application.

9 EtherCAT for Safety Modules

The EtherCAT (Ethernet for Control Automation Technology) bus system is based on the IEEE 802.3 Ethernet standard and uses a master/slave architecture to enable communication between EtherCAT slave devices in the network. The EtherCAT master acts as a controller that sends commands to the EtherCAT slave devices and receives data back from them.

9.1 Working in the SAFETYDesigner

From version 01.01.078, SAFETYDesigner offers the option of using the EtherCAT bus system for safety modules. The following chapters provide a general overview of the working method. More detailed information can be found in the SAFETYDesigner help in the chapter "Working with EtherCAT safety modules".

9.1.1 Reading in Safety EtherCAT files (ESI files)

The SAFETYDesigner can read in ESI files of the EtherCAT devices. The user can define a default path for this. The path can be set in the SAFETYDesigner options. ESI files can be stored by the user in this folder. The files are then loaded in the background each time SAFETYDesigner is started. Files can also be loaded manually.

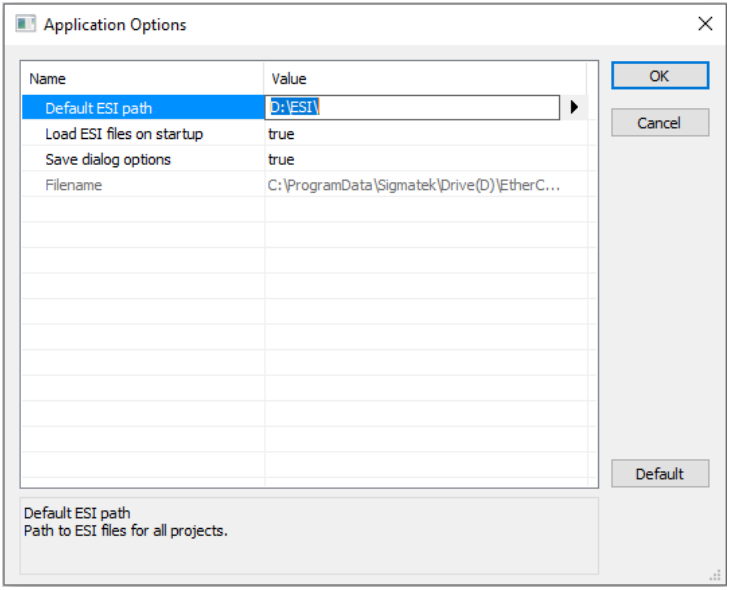

Only Safety EtherCAT devices permitted by SIGMATEK can be used. The permitted devices are described in the white list. The white lists are created by SIGMATEK and cannot be changed.
The white lists are stored in the installation folder under Config\ESI_WL. Additional white lists can be stored here.

9.1.2 Hardware Tree with EtherCAT

The EtherCAT bus can be enabled by the user in the SAFETYDesigner application.

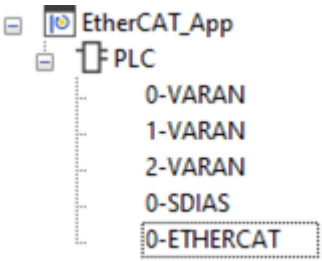

A selection dialog with all permitted devices is opened, the user can select the required module and insert it into the project.

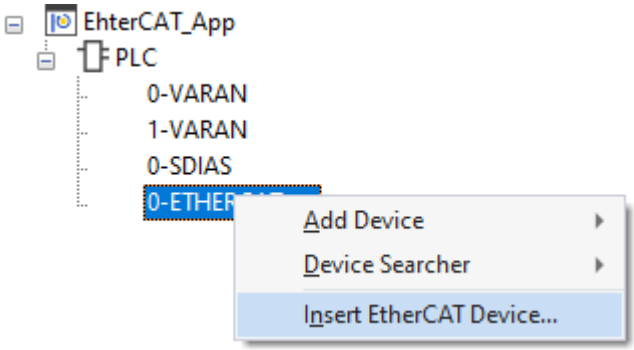

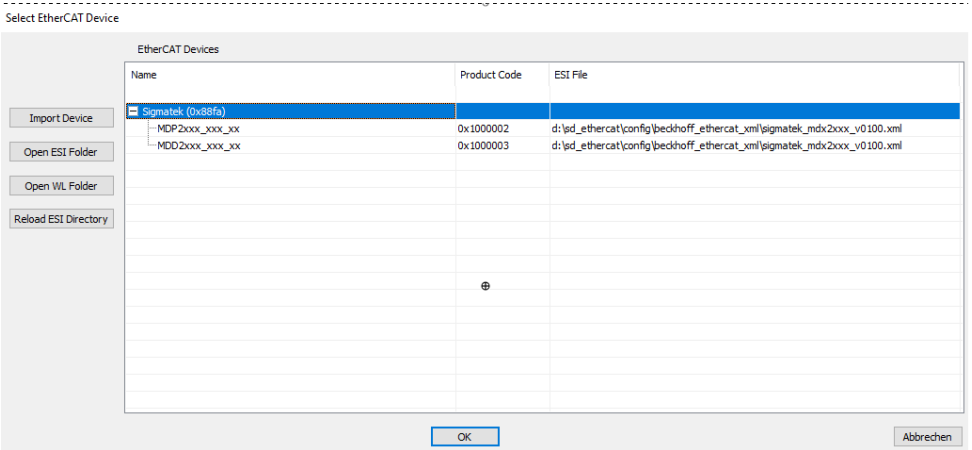

	Only safety modules are displayed on the EtherCAT bus. The position on the EtherCAT bus does not have to match the position on the EtherCAT bus of the machine.

9.1.3 Upload the Hardware Tree

Once all the necessary ESI files have been loaded into the project, the EtherCAT devices can be determined online, just like all other modules.

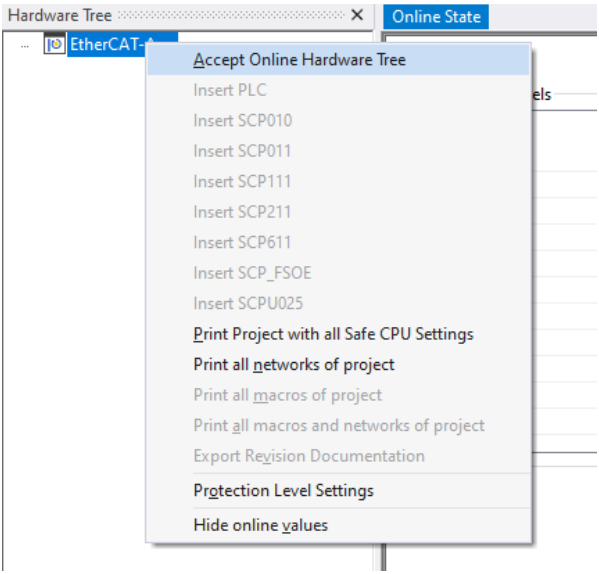

Please note:

- The devices can transfer revision numbers to the SAFETYDesigner. If no revision number is transferred, the device with the highest revision number is inserted from the ESI file. If this is not correct, it must be changed manually in a further step.
- The FSoE slave addresses of the EtherCAT safety modules are transferred automatically. If no FSoE slave address is determined, this must then be determined and entered manually in the SAFETYDesigner.
- Only safety devices that are included in the whitelist are added, all others are skipped.
- All devices are inserted with default settings. Any necessary adjustments to parameters or inputs and outputs must be set manually in the following steps.
- EtherCAT modules and devices that cannot communicate with a safety CPU via FSoE are not accepted.

9.1.4 Using EtherCAT Modules with an SCP 211 Safety CPU

EtherCAT modules can exchange data with a SCP 211 safety CPU using FSoE communication. The Safety EtherCAT module is the FSoE slave, while the Safety CPU (SCP 211) acts as the FSoE master. The modules are coupled by dragging inputs or outputs into the network of the safety CPU.

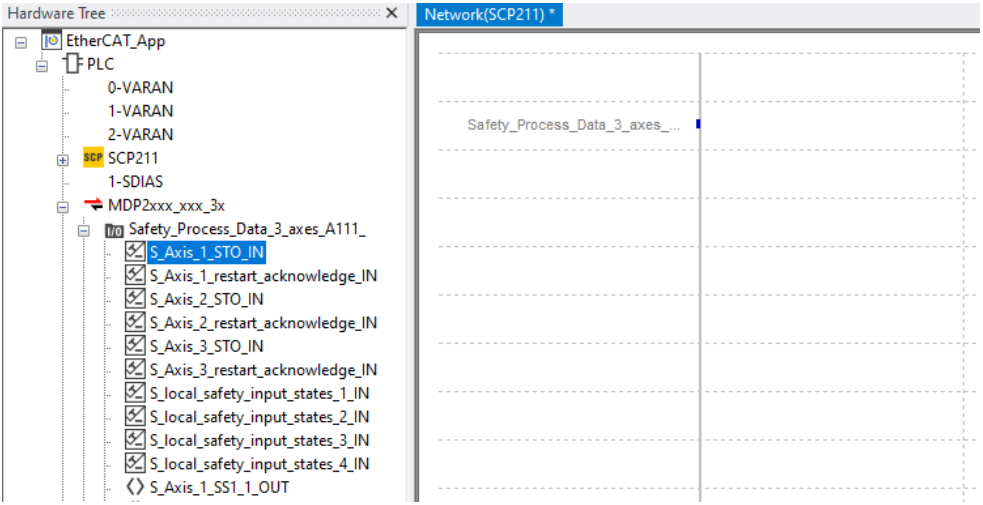

	An EtherCAT module can only be used in networks of a single safety CPU.

	Only the SCP 211 safety CPU can communicate with EtherCAT modules.

EtherCAT modules have a fixed FSoE slave address, which is why this is not assigned automatically in the SAFETYDesigner.

	An FSoE slave address must be entered in order to create a valid compilation. The FSoE slave address must be unique in the EtherCAT system.

	The transmission time cannot be determined on the EtherCAT bus by the SAFETYDesigner. The time must be entered by the user. The time can be taken from the LASAL CLASS 2 application.

9.1.5 Editing FSoE Init Parameters of EtherCAT Safety Modules

When establishing an FSoE connection from the FSoE master to the FSoE slave, parameters can also be sent from the FSoE master to the FSoE slave. The compilation of these parameters for Safety EtherCAT modules is defined in the ESI file, in some cases with default values. The values for these parameters can be changed in a separate dialog.

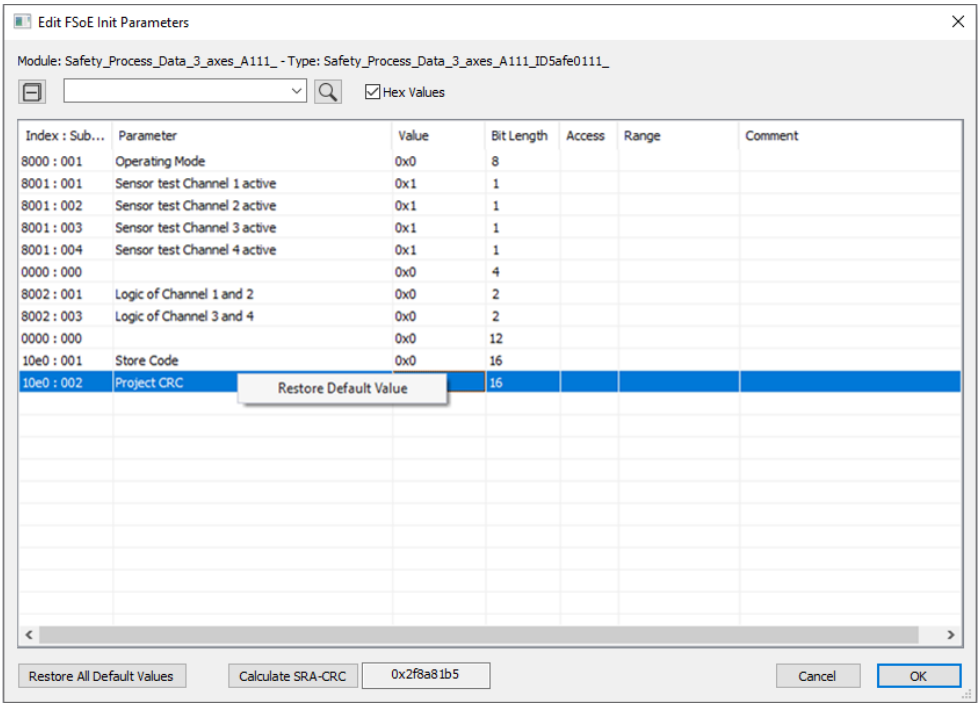

Index : Sub...	Parameter	Value	Bit Length	Access	Range	Comment
8000 : 001	Operating Mode	0x0	8			
8001 : 001	Sensor test Channel 1 active	0x1	1			
8001 : 002	Sensor test Channel 2 active	0x1	1			
8001 : 003	Sensor test Channel 3 active	0x1	1			
8001 : 004	Sensor test Channel 4 active	0x1	1			
0000 : 000		0x0	4			
8002 : 001	Logic of Channel 1 and 2	0x0	2			
8002 : 003	Logic of Channel 3 and 4	0x0	2			
0000 : 000		0x0	12			
10e0 : 001	Store Code	0x0	16			
10e0 : 002	Project CRC		16			

9.1.6 Editing SRA Parameters for Safety EtherCAT Modules

Some EtherCAT modules can be configured via SRA data (Safety Related Application Parameter Set). These are defined in the ESI file. The dialog is called up via the "Edit EtherCAT SRA Parameter(s)" item in the module's context menu.

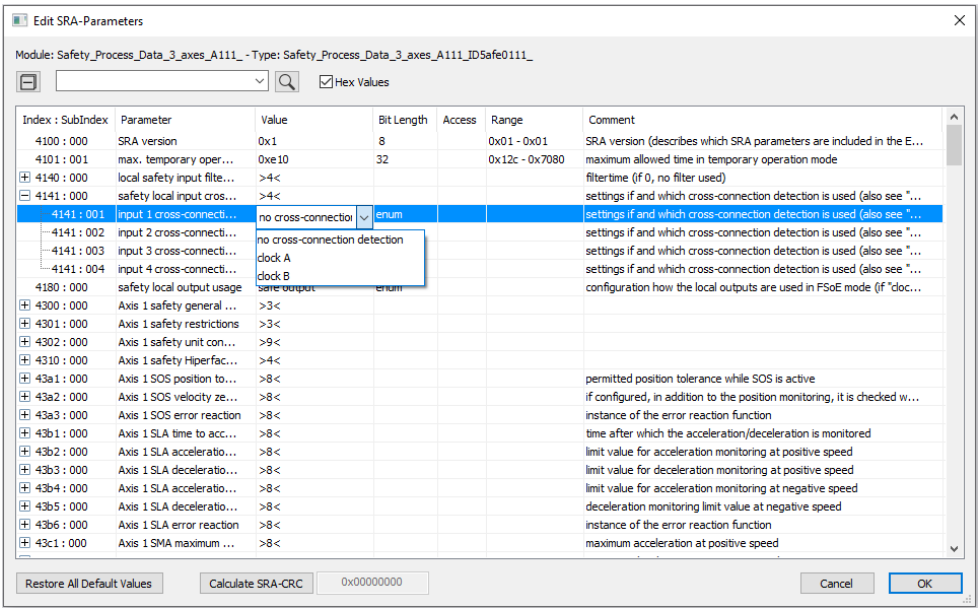

9.1.7 Selection of Inputs and Outputs for the Hardware Tree

There are Safety EtherCAT modules for which the inputs and outputs are not fixed. With these, you can define your own FSoE configuration from a list of possible inputs and outputs. The dialog is called up via the "Edit EtherCAT PDO Mapping Inputs" or "Edit EtherCAT PDO Mapping Outputs" item in the context menu of the module

There is only one dialog, which must be called up separately for inputs and outputs. The labeling is then "Tx PDO Mapping", "Used Inputs" and "Available Inputs" for inputs and "Rx PDO Mapping", "Used Outputs" and "Available Outputs" for outputs. The left-hand side shows the combination of inputs and outputs used and the right-hand side shows all available elements. A correct FSoE frame must be created. Missing entries must be filled with empty bits.

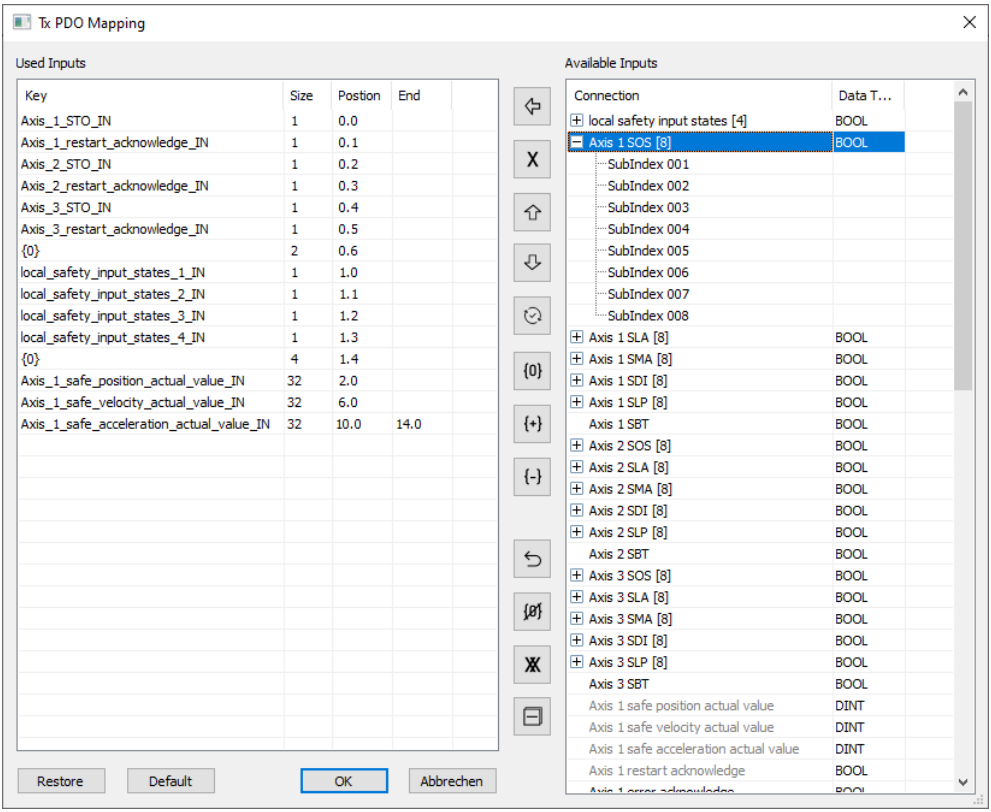

9.1.8 CRC of the Configuration of an EtherCAT Safety Module

EtherCAT safety modules can be configured in various ways:

- preconfigured at the factory or customized using the manufacturer's configuration tool
- configured via FSoE parameters
- configured via SRA parameters

In the case of pre-configuration or a setting with the manufacturer tool, it depends on the module (manufacturer) whether a CRC must be entered.
In the case of FSoE parameters, no CRC is required. The data is transferred here and CRC protection is provided via the FSoE frame.
In the case of the SRA parameters, a CRC is transmitted via the configuration in the FSoE parameter phase to ensure that a connection is made to a correctly configured module. The CRC of the SRA parameters is calculated by the SAFETYDesigner. It must be entered in the FSoE init parameters, whereby the name of the parameter can be different but is normally clearly visible.

9.1.9 Exporting the configuration for LASAL CLASS 2

The finished configuration of a safety project with Safety EtherCAT modules must be made available to the LASAL CLASS 2 tool. In the LASAL CLASS 2 project, the correct PDO mapping must be set for the EtherCAT master in the EtherCAT system; this can be done by importing the safety export. An export file can be generated automatically after each successful compilation. There is an "Export EtherCAT" item in the properties of the project for this purpose. The file is stored in the project directory under [Projectname]_Exp_LC2.xml (e.g. EtherCATApp_Exp_LC2.xml).

9.2 Working with LASAL CLASS 2

From version 02.02.245, the LASAL CLASS 2 tool offers the option of using the EtherCAT bus system for safety modules. The following chapters provide a general overview of the mode of operation; more detailed information can be found in the LASAL CLASS 2 help in the chapter "Working with EtherCAT safety modules".

9.3 Importing the SAFETYDesigner Configuration in LASAL CLASS 2

In LASAL CLASS 2, a safety project can be imported into the Safety Pane. This can be opened via the toolbar or via the Tools menu.

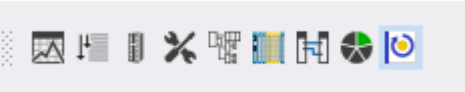

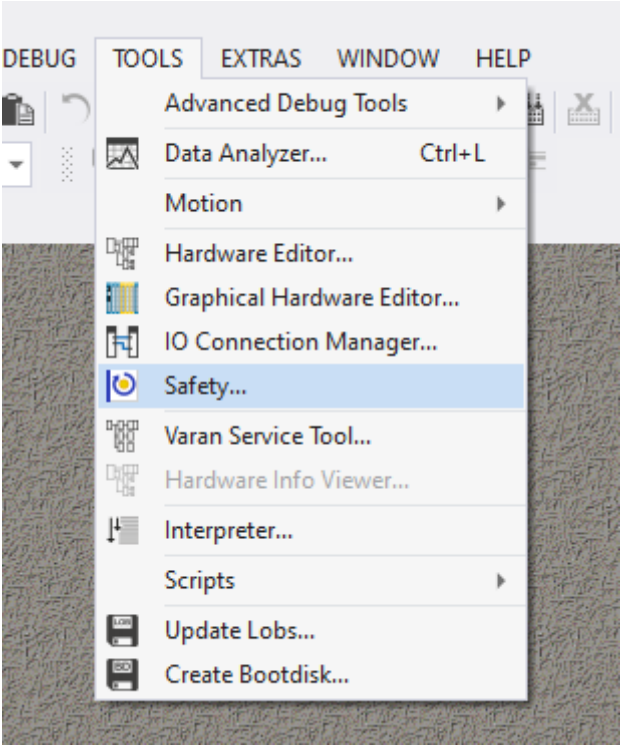

The export file of a safety project can then be added in the Safety Pane using the plus button.

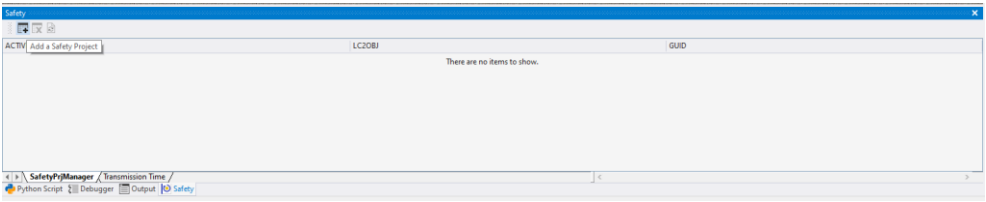

After selecting/adding the safety export, the EtherCAT tree of the safety project is displayed.

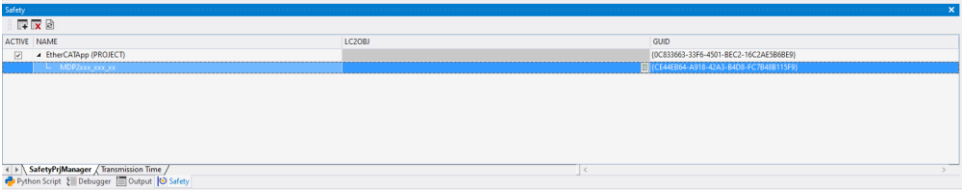

The reason for this is that an EtherCAT device from the SAFETYDesigner must be linked to an EtherCAT device in the LASAL CLASS 2 project. This allows the required configuration of the device in SAFETYDesigner to be transferred to the device in LASAL CLASS 2 and thus entered in the ENI file.

The objects are linked in the LC2OBJ column in the Safety Pane. There are several options for linking the objects. The object can simply be entered manually.

The button in the LC2OBJ column can be used to select suitable objects in the project.

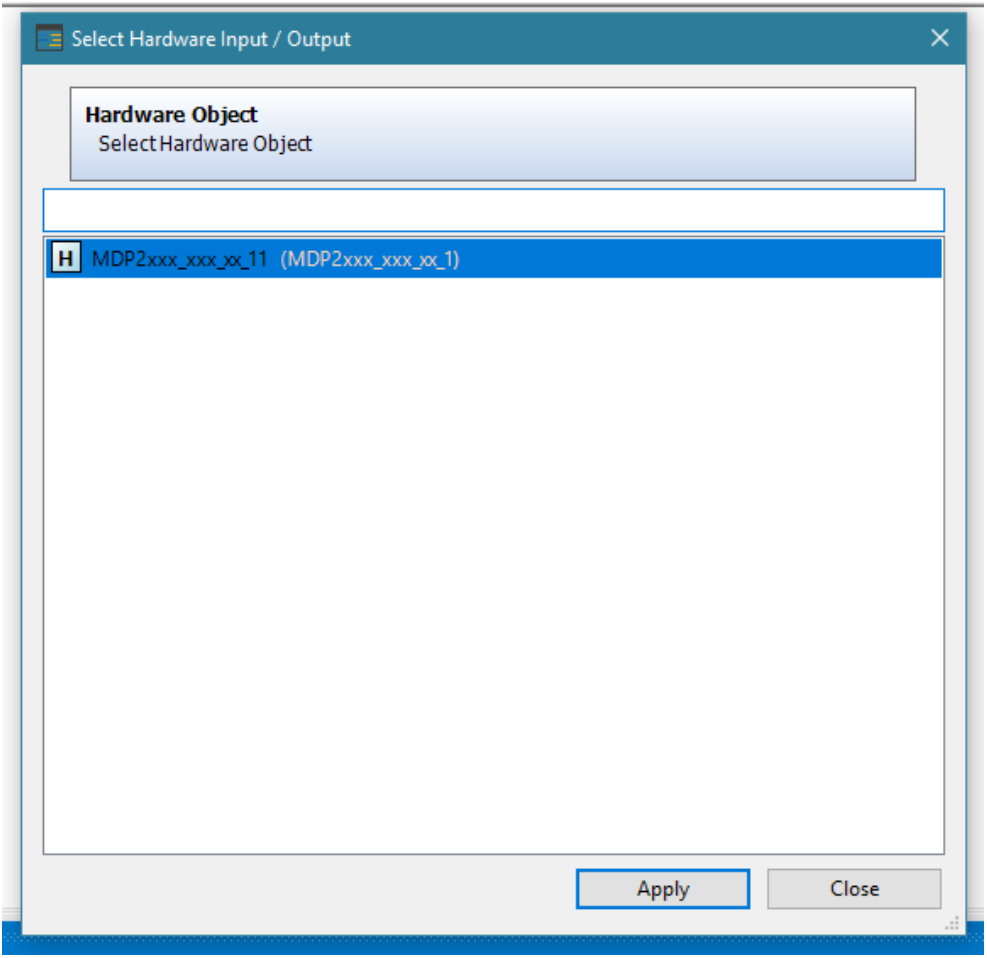

When the dialog is closed, the name of the object is entered in the column provided.

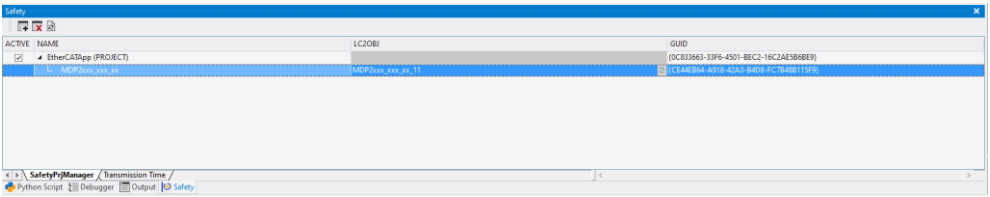

Once the hardware has been linked, LASAL CLASS 2 automatically enters the configuration. With the next build + download, the FSoE connections should then work correctly without any further action.

There are cases where no explicit linking of objects is required, namely if there is only **1** possible link for the respective device, then LASAL CLASS 2 performs an automatic linking. If this is not clearly possible, the user must set the link manually.

10 Maintenance and Decommissioning

10.1 General

Important:
Remote maintenance must be limited to the diagnostic mode.
Forcing or downloading the application is only allowed for organizational measures on-site. For the purpose, the operator must allow the external connection through the firewall explicitly (VPN, etc.).

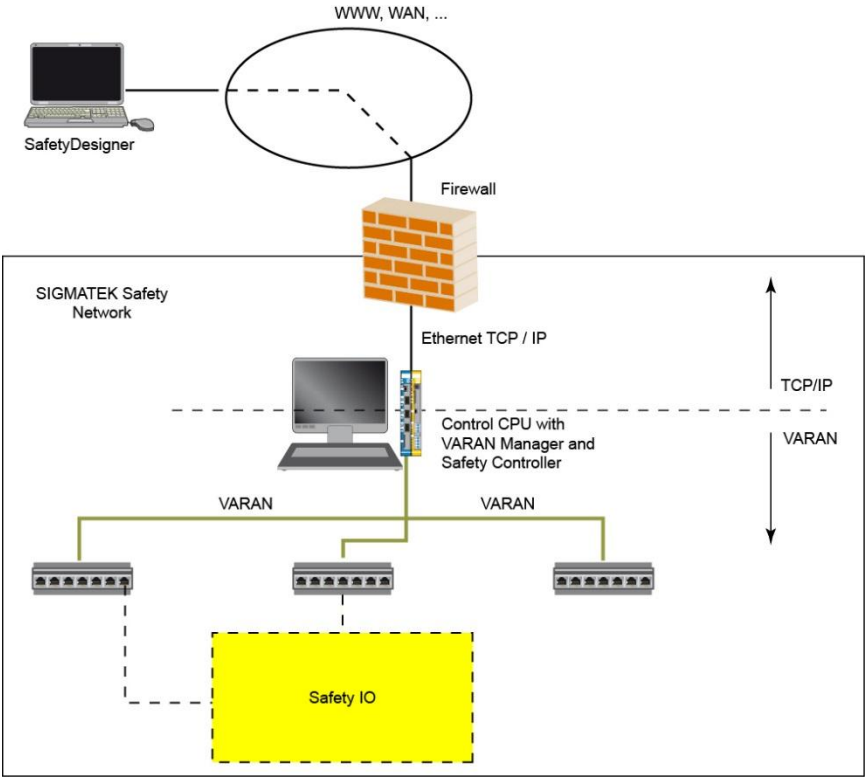

Fig. 74 Remote maintenance concept

Because the technical security concept (IT security) is always the responsibility of the network planer and operator, an organizational approach is described only.

10.2 Requirements

Important:

1. The parameterization and programming as well as debugging and forcing is only allowed with the SAFETYDesigner from SIGMATEK.
2. Communication with the Safety components is only allowed over a Standard CPU as the gateway (exception: SCP 010/SCP 011/SCP 111/SCP 111-S/SCP 211 in stand-alone mode).
3. A network must be protected with a firewall.

10.3 Network Operator Requirements

DANGER!

1. The network operator must ensure that no external communication with a parameterizable tool (e.g. via SAFETYDesigner and PC) to their internal network is possible. This is normally ensured by the firewall
2. A connection can only be established after the network administrator explicitly released a specific IP address (for the desired configuration tool). A release requires an additional direct contact (e.g. telephone) between a service person on-site and the remote workstation.
3. The on-site service person must monitor all processes and is responsible for the system.
4. After completing the external activities, the firewall must be secured from external influences.

Sufficient measures that meet latest technology standards and ensure the appropriate security level are also allowed.

11 Declaration of Conformity

SIGMATEK

EU-Konformitätserklärung
EU Declaration of Conformity

Hersteller (Manufacturer):	Sigmatek GmbH & Co KG
Anschrift (Address):	Sigmatekstraße 1 A- 5112 Lamprechtshausen Austria
Produktgruppe (Productfamily):	**S-Dias Safety**
Produktbezeichnung (Product name):	**SCP111**
Benannte Stelle: (Notified Body of EC-Type-Examination Certificate):	**TÜV AUSTRIA Deutschland GMBH**
Kennnummer der Benannten Stelle: (Notified Body Number):	**0408**
Nummer der EG-Baumusterbescheinigung: (EC-Type-Examination Certificate Number):	**TÜV-A-MHF/MG/13-06962**

Das (Die) bezeichnete(n) Produkt(e) stimmt (stimmen) mit den Vorschriften folgender Europäischer Richtlinien überein. Die Ausgabe der verwendeten Normen entspricht der zum Zeitpunkt der Erstellung dieses Dokumentes geltenden Fassung:
The indicated product(s) is (are) in conformance with the regulations of the following European Directives. The edition of the Standards used comply with those valid at the time this document was created.

2014/30/EU — Richtlinie des Rates zur Harmonisierung der Rechtsvorschriften der Mitgliedsstaaten über die elektromagnetische Verträglichkeit (EMV-Richtlinie)
2014/30/EU — Council Directive on the harmonization of the laws of the member states relating to electromagnetic compatibility (EMC Directive)

Harmonisierte Europäische Norm (Harmonized European Standard):

EN 61000-6-2
EN 61000-6-4
EN 61326-3-1

2014/35/EU — Richtlinie zur Harmonisierung der Rechtsvorschriften der Mitgliedsstaaten über die Bereitstellung elektrische Betriebsmittel zur Verwendung innerhalb bestimmter Spannungsgrenzen (Niederspannungs-Richtlinie)
2014/35/EU — Directive relating to electrical equipment designed for use within certain voltage limits (Low Voltage Directive).

Harmonisierte Europäische Norm (Harmonized European Standard):

EN 61131-2

CECON1179

Page 1/2

SIGMATEK GmbH & Co KG
Sigmatekstraße 1
A-5112 Lamprechtshausen
Tel.: +43 62 74/43 21-0
Fax: +43 62 74/43 21-18
office@sigmatek.at
www.sigmatek-automation.com
UID-Nummer:
ATU 34970403

SIGMATEK

SIGMATEK

EU-Konformitätserklärung
EU Declaration of Conformity

2006/42/EG 2006/42/EC	Richtlinie des Europäischen Parlaments und des Rates über Maschinen (Maschinenrichtlinie). Machinery Directive

Harmonisierte Europäische Norm (Harmonized European Standard):

EN ISO 13849
EN 62061

2011/65/EU	Richtline des Europäischen Rates Europäischen Parlaments und des Rates zur Beschränkung der Verwendung bestimmter gefährlicher Stoffe in Elektro- und Elektronikgeräten (RoHS-Richtlinie).
2011/65/EU	Directive of the European Parlament and the council on the restriction of the use of certain hazardous substances in electrical and electronic equipment.

Lamprechtshausen, den 13.06.2018
Ort und Datum
Place and date

Andreas Melkus
Name und Unterschrift Geschäftsführer
Name and Signature of Managing Director

CECON1179

Page 2/2

SIGMATEK GmbH & Co KG
Sigmatekstraße 1
A - 5112 Lamprechtshausen
Tel.: +43 62 74/43 21 - 0
Fax: +43 62 74/43 21 - 18
office@sigmatek.at
www.sigmatek-automation.com
UID-Nummer:
ATU 34970403

Note:
Current EU declarations of conformity for all SIGMATEK products can be found on the homepage www.sigmatek-automation.com

12 Certificate S-DIAS I/O System with internal Bus

ZERTIFIKAT | CERTIFICATE | CERTIFICAT | CERTIFICADO | СЕРТИФИКАТ | شهادة | 证书 | 인증서

EG-Baumusterprüfbescheinigung
Certificate of EC type examination

TÜV AUSTRIA

Nr.: TÜV-A-MHF/MG13-06962A

gemäß Richtlinie 2006/42/EG (Maschinen)
according to the Directive 2006/42/EC (Machinery)

Akkreditierung Austria A 0274 ISO/IEC 17020

Auftraggeber: *Applicant:*	Sigmatek GmbH & Co. KG Sigmatekstraße 1 5112 Lamprechtshausen Österreich/Austria	**Hersteller:** *Manufacturer:*	Sigmatek GmbH & Co. KG Sigmatekstraße 1 5112 Lamprechtshausen Österreich/Austria
Produkt: *Product:*	‚S-DIAS I/O System mit internem Bus' *‚S-DIAS I/O System with internal Bus'*	**Zubehör:** *Accessories:*	Gemäß Anhang *According to annex*
Typ: *Type:*	Logikeinheiten für Sicherheitsfunktionen *Logic units to ensure safety functions*		
Beschreibung: *Description:*	Sicherheitsbezogenes Programmierbares I/O-System *Safety related programmable I/O-system*		
Prüfgrundlagen: *Tested according to:*	Richtlinie 2006/42/EG idgF. und Normen: EN ISO 13849, EN / IEC 62061 *Directive 2006/42/EC in current version and standards EN ISO 13849, EN / IEC 62061* (Anwendung gemäß Risikobeurteilung / *application according to risk assessment)*		
Bemerkungen: *Remarks:*	Produkte und Sicherheitskennwerte gemäß Anhang. *Products and safety parameters according to annex.*		

Hiermit bestätigt die TÜV AUSTRIA SERVICES GMBH als Benannte Stelle (ID-Nr. 0408), dass das oben angeführte Produkt den grundlegenden Sicherheits-Anforderungen der Richtlinie 2006/42/EG entspricht. Grundlage dieser Bescheinigung ist das zur Prüfung vorgelegte Prüfmuster und die technische Dokumentation.
Gemäß Artikel 5 und Anhang III ist am Produkt die CE-Kennzeichnung vorgesehen.

Hereby TÜV AUSTRIA SERVICES GMBH certifies as Notified Body (ID-No 0408), that the above mentioned product meets the essential safety requirements of the Directive 2006/42/EC. The certificate is based on the test specimen and the technical documentation subjected to the test.
According to Article 5 and annex III the CE mark is foreseen to be affixed on the product.

Prüfbericht: 13-00055A MFO SIGMATEK SDIAS_int_Bus PB
Test report: 13-00055A MFO SIGMATEK SDIAS_int_Bus PB

TÜV AUSTRIA SERVICES GMBH TÜV AUSTRIA

14.12.2018 **Datum** *Date*	**Dipl.-Ing. (FH) Matthias Forkl** **Benannte Stelle 0408** *Notified Body 0408*	**30.11.2023** **Gültig bis** *Valid till*

Auszugsweise Vervielfältigung nur mit Genehmigung der TÜV AUSTRIA SERVICES GMBH gestattet.
Duplication of this document in parts is subject to the approval by TÜV AUSTRIA SERVICES GMBH.

FM-INE-AS-MRL-0100b
Revision 02 vom 12.01.2017
MG13-06962A MFO SIGMATEK_SDIAS_intBus_BB.docx

TÜV AUSTRIA SERVICES GMBH
Industry and Energy
Anlagen- und Maschinensicherheit

Deutschstraße 10
A-1230 Wien
Tel.: +43 / 5 0454-6202
http://www.tuv.at

005408-17-4

Note:
EG type examination certificates (TÜV certificates) for other SIGMATEK Safety products can be found on the homepage www.sigmatek-automation.com

13 Appendix A: Troubleshooting

If none of the mentioned solutions helps, please contact SIGMATEK GmbH & Co KG.

Error Variable	Description	Reason Code 0	Reason Code 1	Solution	LED display
ERRVAL(0)	No errors			normal operation	
ERRVAL(1)	The cyclic process is not completed within the allowed time. Possible cause(s): • application error	actual cycle time microseconds (maximum of both values from controller 1 and 2)	cycle time limit in microseconds	Increase cycle time of the Safety CPU, cancel error with Quit Error.	Error LED of the Safety module shines red
ERRVAL(2)	A buffer was entered in a function call as a parameter. However, the buffer size is too small. Possible cause(s): • program error	Actual buffer size	required buffer size	Contact SIGMATEK GmbH & Co KG	Error LED of the Safety module shines red
ERRVAL(3)	It was determined that a global variable was overwritten. Possible cause(s): • Program error or defective RAM	affected overwritten variable possible values: 0 actual error code	always 0	Contact SIGMATEK GmbH & Co KG	Error LED of the Safety module shines red
ERRVAL(4)	Program code was run that, according to program logic, should never be run. Possible cause(s): • program error, defective CPU	location of the code that was run possible values: 0 to 41	always 0	Contact SIGMATEK GmbH & Co KG	Error LED of the Safety module shines red
ERRVAL(5)	While accessing an array, the index exceeds the array limits. Possible cause(s): • program error	error cause possible values: 0 to 20	maximum possible array index	Contact SIGMATEK GmbH & Co KG	Error LED of the Safety module shines red

ERRVAL(6)	Invalid parameter value in a function call (NULL pointer). Possible cause(s): • program error	error cause possible values: 0 to 7	always 0	Contact SIGMATEK GmbH & Co KG	Error LED of the Safety module shines red
ERRVAL(7)	During the RAM test, a read or CRC-32 error was detected in the March C algorithm. Possible cause(s): • hardware error • RAM, flash, address, data line programming error • RAM test was run with unlocked interrupts	affected test step	affected area in the RAM	Contact SIGMATEK GmbH & Co KG	Error LED of the Safety module shines red
ERRVAL(8)	During the RAM test, a read or CRC-32 error was detected in the Galpat algorithm. Possible cause(s): • hardware error • RAM, flash, address, data line programming error • RAM test was run with unlocked interrupts	affected test step	affected areas in the RAM (CRC32 check and GalPat check)	Contact SIGMATEK GmbH & Co KG	Error LED of the Safety module shines red
ERRVAL(9)	The configuration of the required modules is not correct. Possible cause(s): • exchange of several modules • module configured incorrectly • incompatible interface frame (wrong CRC)	0 more than 1 module is missing 1 a module is missing and a module update was already performed previously. 2 nothing can be distributed to the missing module (S-CPU)	if Reason-Code = between 0 and 1: always 0 if Reason-Code 0 = 2: Safety number of the remote module	If more than 1 module was exchanged, the application has to be downloaded again. In case of a wrong configuration, again download the application.	Error LED of the Safety module shines red

		3 maximum number of retries for the configuration distribution or configuration test has been exceeded.	if Reason-Code 0 = 3: number of retries	Check whether hardware structure corresponds with the application; change application accordingly. In case of a wrong interface CRC the writing interface has to be exported again and imported on the reading side. Application has to be downloaded again. Cancel error with Quit Error.	
		4 while trying to send the configuration, the error status was detected in the target module.	if Reason-Code 0 = 4: error code of the remote module		
ERRVAL(10)	The RAM memory, which is used for data structures with configuration-dependent size, is too small. Possible cause(s): • too many modules • too big application	always 0	always 0	Check size of application and downsize accordingly, download application, cancel error with Quit Error. Check number of modules, remove according modules, cancel error with Quit Error.	Error LED of the Safety module shines red
ERRVAL(11)	While distributing the configuration data to a remote module, the maximum number of errors was exceeded. Possible cause(s): • data exchange error • another module is defective	error code of the last distribution attempt	Return code of the last executed SSDO instruction	Trigger distribution several times; if this does not help: Contact SIGMATEK GmbH & Co KG. If modules are defective: Contact SIGMATEL GmbH & Co KG	Error LED of the Safety module shines red

ERRVAL(12)	An error has occurred during exception handling. Possible cause(s): • software error	0 the maximum number of nested TRY-CATCH-ETRY blocks was exceeded 1 the end of a TRY-CATCH-ETRY block has been reached without a starting TRY. 2 exception not in the normal program mode 3 No TRY block available to intercept the exception	Number of open TRY-CATCH-ETRY blocks	Contact SIGMATEK GmbH & Co KG	Error LED of the Safety module shines red
ERRVAL(13)	After distributing the configuration data to a remote module, a difference was detected during back reading.	always 0	always 0	Again download application and restart. If the error still occurs: Contact SIGMATEK GmbH & Co KG	Error LED of the Safety module shines red
ERRVAL(14)	The interpreter code was not found in the configuration data. Possible cause(s): • defective configuration • software error	always 0	always 0	Again download application and restart. If the error still occurs: Contact SIGMATEK GmbH & Co KG	Error LED of the Safety module shines red
ERRVAL(15)	In the interpreter list, of the configuration an FSB was entered for which no function block code exists. Possible cause(s): • a defective configuration was loaded • defective flash	The function block identification for the missing function block code	always 0	Contact SIGMATEK GmbH & Co KG	Error LED of the Safety module shines red

ERRVAL(16)	An error was detected in a non-editable flash area during the ROM test. This is a permanent error, which cannot be canceled. Possible cause(s): • defective flash	error cause	always 0	Contact SIGMATEK GmbH & Co KG	Error LED of the Safety module shines red
ERRVAL(17)	The called FSB returned an error code.	actual error code of the function block (always unlike 0)	error code setting of function block (always 0 = no error)	Contact SIGMATEK GmbH & Co KG	Error LED of the Safety module shines red
ERRVAL(18)	The remote safe input of a missing optional module has exceeded the maximum age.	always 0	always 0	Check whether the standard communication for each required Safety module is intact. In addition, ensure that none of the non-required Safety modules is in the error mode. It can also be, that the maximum transmission time was configured too low. The above points must be checked. If the error was corrected, it can be canceled with Quit error or by restarting the system, errors are eliminated.	Error LED of the Safety module blinks

ERRVAL(19)	After calling the FSB, a not allowed value was found in the application memory. Possible cause(s): • defective FSB	actual pattern at the end of the object memory	pattern setting at the end of the object memory	Contact SIGMATEK GmbH & Co KG	Error LED of the Safety module shines red
ERRVAL(20)	The called FSB did not increment the counter variable. Possible cause(s): • defective FSB	actual value in the counter variable	value setting in the counter variable	Contact SIGMATEK GmbH & Co KG	Error LED of the Safety module shines red
ERRVAL(21)	An error was detected during administration of the RAM memory for the data structures with a configuration-dependent size. Possible cause(s): • software error	always 0	always 0	Contact SIGMATEK GmbH & Co KG	Error LED of the Safety module shines red
ERRVAL(22)	The answer to an SSDO request is not yet available. Possible cause(s): • runtime over the bus • processing time in the target module too big	always 0	always 0	Increase time on the bus. If the error still occurs: Contact SIGMATEK GmbH & Co KG	Error LED of the Safety module shines red
ERRVAL(23)	In an SSDO answer, an error is displayed in the return code field. Possible cause(s): • error in the remote module	always 0	always 0	Check remote modules for errors. If the error still occurs: Contact SIGMATEK GmbH & Co KG	Error LED of the Safety module shines red

ERRVAL(24)	In an SSDO answer, less data is received as expected. Possible cause(s): • error in the remote module	actual length of the data in the SSDO answer	preset length of the data in the SSDO answer	Check remote modules for errors. If the error still occurs: Contact SIGMATEK GmbH & Co KG	Error LED of the Safety module shines red
ERRVAL(25)	An error was detected while testing the checksums with the constant elements in the configuration tables in RAM. Possible cause(s): • software error, RAM defective	identification of the table possible values: 0 to 5	always 0	Contact SIGMATEK GmbH & Co KG	Error LED of the Safety module shines red
ERRVAL(26)	Access to the application memory was not possible. Possible cause(s): • software error • incorrect query from the SAFETYDesigner	0	Both lower bytes contain the detected invalid cells index; both upper bytes contain the number of available cells.	Contact SIGMATEK GmbH & Co KG	Error LED of the Safety module shines red
		1	invalid cell index		
		2	invalid address offset		
		3	both lower bytes contain the address offset; both upper bytes contain the length		
		4	invalid length (not divisible by 4)		
ERRVAL(27)	An invalid block header was detected in a flash memory area. Possible cause(s): • hardware error (flash defective), • programming process was interrupted	always 0	always 0	Contact SIGMATEK GmbH & Co KG	Error LED of the Safety module shines red

ERRVAL(28)	During a login attempt, an invalid password was entered. Possible cause(s): • typing error • hacking attempt	always 0	always 1	Error displayed in the console window of the SAFETYDesigner. The password must be re-entered.	Continued normal operation
ERRVAL(29)	An SSDO frame contains an invalid parameter. Possible cause(s): • software error	identification of the error cause possible values:		Contact SIGMATEK GmbH & Co KG	Error LED of the Safety module shines red
		0	always 0		
		1	always 0		
		2	always 0		
		3	always 0		
		4	if Reason-Code 0 = 4 The lower 2 bytes contain the size of the transferred buffer; the upper 2 bytes contain the maximum size.		
ERRVAL(30)	An SSDO frame is missing a parameter. Possible cause(s): • software error	used in the firmware for the hardware test only		Contact SIGMATEK GmbH & Co KG	Error LED of the Safety module shines red
ERRVAL(31)	Internal error while processing the SSDO Possible cause(s): • software error	length of the SSDO to write	maximum length of an SSDO	Contact SIGMATEK GmbH & Co KG	Error LED of the Safety module shines red
ERRVAL(32)	The SSDO packet contains an invalid command byte. Possible cause(s): • software error	invalid command	number of available commands	Contact SIGMATEK GmbH & Co KG	Error LED of the Safety module shines red

ERRVAL(33)	While trying to change a password, an invalid new password was entered. Possible cause(s): • user error	always 0	always 0	If an incorrect password is entered, a warning is triggered in the SAFETYDesigner. If error 33 occurs: Contact SIGMATEK GmbH & Co KG	Error LED of the Safety module shines red
ERRVAL(34)	The SSDO packet contains an invalid virtual address. Possible cause(s): • software error	identification of the error cause possible values: 0 to 1	always 0	Contact SIGMATEK GmbH & Co KG	Error LED of the Safety module shines red
ERRVAL(35)	While processing the SSDO, an internal buffer was determined to be too small for the required data amount. Possible cause(s): • software error • defective Safety tool	identification of the error cause possible values: 0 to 1	always 0	Contact SIGMATEK GmbH & Co KG	Error LED of the Safety module shines red
ERRVAL(36)	The ADC is not functioning correctly. Possible cause(s): • hardware error	number of the defective ADC channel	always 0	Contact SIGMATEK GmbH & Co KG	Error LED of the Safety module shines red
ERRVAL(37)	The measured ADC value of the external reference voltage is too low. Possible cause(s): • hardware error	measured value	lower limit	Contact SIGMATEK GmbH & Co KG	Error LED of the Safety module shines red

ERRVAL(38)	The measured ADC value of the external reference voltage is too high. Possible cause(s): • hardware error	measured value	upper limit	Contact SIGMATEK GmbH & Co KG	Error LED of the Safety module shines red
ERRVAL(39)	The measured ADC value of a supply voltage is too small. Possible cause(s): • hardware error	measured value	lower limit	The Safety module was supplied with the wrong voltage. Check that the voltage is between 18 V and 30 V (nominal = 24 V). Next, cancel the error with Quit Error.	Error LED of the Safety module shines red DCOK LED does not shine
ERRVAL(40)	The measured ADC value of a supply voltage is too high. Possible cause(s): • hardware error	measured value	upper limit	The Safety module was supplied with the wrong voltage. Check that the voltage is between 18 V and 30 V (nominal = 24 V). Next, cancel the error with Quit Error.	Error LED of the Safety module shines red DCOK LED does not shine
ERRVAL(41)	The measured ADC value of a supply voltage is too small. Possible cause(s): • hardware error	measured value	lower limit	Check voltage supply.	Error LED of the Safety module shines red
ERRVAL(42)	The measured ADC value of a supply voltage is too high. Possible cause(s): • hardware error	measured value	upper limit	Check voltage supply.	Error LED of the Safety module shines red

ERRVAL(43)	The measured ADC value of a supply voltage is too small. Possible cause(s): • hardware error	measured value	lower limit	Check voltage supply.	Error LED of the Safety module shines red
ERRVAL(44)	The measured ADC value of a supply voltage is too high. Possible cause(s): • hardware error	measured value	upper limit	Check voltage supply.	Error LED of the Safety module shines red
ERRVAL(45)	The measured ADC value of a supply voltage is too small. Possible cause(s): • hardware error	measured value	lower limit	Check voltage supply.	Error LED of the Safety module shines red
ERRVAL(46)	The measured ADC value of a supply voltage is too high. Possible cause(s): • hardware error	measured value	upper limit	Check voltage supply.	Error LED of the Safety module shines red
ERRVAL(47)	The measured ADC value of a supply voltage is too small. Possible cause(s): • hardware error	measured value	lower limit	Check voltage supply.	Error LED of the Safety module shines red
ERRVAL(48)	The measured ADC value of a supply voltage is too high. Possible cause(s): • hardware error	measured value	upper limit	Check voltage supply.	Error LED of the Safety module shines red
ERRVAL(49)	Testing the LOG memory in the POST determined that both sectors are full. Possible cause(s): • hardware error • program error	always 0	always 0	Contact SIGMATEK GmbH & Co KG	Error LED of the Safety module shines red

ERRVAL(50)	Testing the LOG memory in the POST determined that both sectors contain data but are not full. Possible cause(s): • hardware error • program error	always 0	always 0	Contact SIGMATEK GmbH & Co KG	Error LED of the Safety module shines red
ERRVAL(51)	The messages are not continuous (holes in log memory). Possible cause(s): • program error	start address of the first empty entry located in the log memory	always 0	Contact SIGMATEK GmbH & Co KG	Error LED of the Safety module shines red
ERRVAL(52)	The information on the stored safety number of the remote module is inconsistent Possible cause(s): • program error	actual number of saved remote modules	not allowed number of saved remote modules	Contact SIGMATEK GmbH & Co KG	Error LED of the Safety module shines red
ERRVAL(53)	The SSDO command cannot be executed in the actual status. Possible cause(s): • module is running the boot code	always 0	always 0	Restart. If the error still occurs: Contact SIGMATEK GmbH & Co KG	Error LED of the Safety module shines red
ERRVAL(54)	An attempt was made to access a memory area (Flash or SD card) to which no access is allowed or possible. Possible cause(s): • program error • error in the Safety tool	always 0	always 0	Contact SIGMATEK GmbH & Co KG	Error LED of the Safety module shines red
ERRVAL(55)-ERRVAL(59)	A time-out has occurred while programming the flash. Possible cause(s): • hardware error	always 0	always 0	Contact SIGMATEK GmbH & Co KG	Error LED of the Safety module shines red

ERRVAL(60)-ERRVAL(61)	An attempt was made to program a locked page while programming the flash. Possible cause(s): • program error	always 0	always 0	Contact SIGMATEK GmbH & Co KG	Error LED of the Safety module shines red
ERRVAL(62)-ERRVAL(66)	An error has occurred while programming the flash. Possible cause(s): • program error • hardware error	always 0	always 0	Contact SIGMATEK GmbH & Co KG	Error LED of the Safety module shines red
ERRVAL(67)	An attempt was made to delete a flash area that did not fit the sector limits in the flash. Possible cause(s): • program error	always 0	always 0	Contact SIGMATEK GmbH & Co KG	Error LED of the Safety module shines red
ERRVAL(68)	Invalid parameter value in a function call. Possible cause(s): • program error	identification of the error cause possible values: 0 to 54	always 0	Contact SIGMATEK GmbH & Co KG	Error LED of the Safety module shines red
ERRVAL(69)	The space reserved in the SPDO for the safety values is too small. Possible cause(s): • software error	index of the most significant bytes of the safety values to send	maximum size of the Safety values to send	Contact SIGMATEK GmbH & Co KG	Error LED of the Safety module shines red
ERRVAL(70)	Cross communication does not work (transmission error). Possible cause(s): • hardware error	1 Post error during self-test 2 error in the U_ART detected 3 FPGA Fifo send buffer is full	error flags	Contact SIGMATEK GmbH & Co KG	Error LED of the Safety module shines red

ERRVAL(71)	Cross communication does not work (transmission error). Possible cause(s): • hardware error	in E_CC1: 1 Post error during self-test 2 error in the U_ART detected in ECC2: error flags	error flags	Contact SIGMATEK GmbH & Co KG	Error LED of the Safety module shines red
ERRVAL(72)	A division by 0 was attempted. Possible cause(s): • software error	always 0	always 0	Contact SIGMATEK GmbH & Co KG	Error LED of the Safety module shines red
ERRVAL(73)	Cross communication does not work (transmission error). Possible cause(s): • hardware error	value received via cross communication	always 0	Contact SIGMATEK GmbH & Co KG	Error LED of the Safety module shines red
ERRVAL(74)	The logical program monitor has determined that a program component was not run in the Op/OpTemp mode. Possible cause(s): • software error	program component identification	always 0	Contact SIGMATEK GmbH & Co KG	Error LED of the Safety module shines red
ERRVAL(75)	The values for the local inputs that were read into both controls have different values for an unacceptably long time. Possible cause(s): • hardware error • input circuit	always 0	always 0	Contact SIGMATEK GmbH & Co KG	Error LED of the Safety module shines red
ERRVAL(76)	Cross communication does not work (timeout). Possible cause(s): • hardware error • software error	always 0	always 0	Contact SIGMATEK GmbH & Co KG	Error LED of the Safety module shines red

ERRVAL(77)	The contents of an STDO answer in both controllers are different. Possible cause(s): • software error	0 or 1 depending on the type of error	always 0	Contact SIGMATEK GmbH & Co KG	Error LED of the Safety module shines red
ERRVAL(78)	The runtime monitor was falsely deactivated in an operation runtime status. Possible cause(s): • software error	identification of the call from which the monitor was deactivated	always 0	Contact SIGMATEK GmbH & Co KG	Error LED of the Safety module shines red
ERRVAL(79)-ERRVAL(81)	Cross communication does not wok (unexpected value received). Possible cause(s): • hardware error • software error	value received via cross communication	expected value (= set value)	Contact SIGMATEK GmbH & Co KG	Error LED of the Safety module shines red
ERRVAL(82)	The calculated output image in both controllers is different. Possible cause(s): • software error • hardware error	index of the cell in the application memory whose contents do not match the other controller	contents of the cell run in Reason-Code 0	Contact SIGMATEK GmbH & Co KG	Error LED of the Safety module shines red
ERRVAL(83)	The other controller is no longer synchronized during cross communication. This is not an error, which triggers the safe status. In reaction to this error, the controllers resynchronize, exchange information and the decision is made whether to trigger the safe status or not. Possible cause(s): • one controller has detected an error, the other has not	always 0	always 0	Cancel error, optionally restart system. If the error still occurs: Contact SIGMATEK GmbH & Co KG	Error LED of the Safety module blinks quickly

ERRVAL(84)	The contents of the SD card could not be loaded because configuration in the flash is not available and also not deleted. Possible cause(s): • user error	always 0	always 0	Delete memory of the Safety CPU and try again.	Error LED of the Safety module shines red
ERRVAL(85)	The SD card could not be initialized. Possible cause(s): • hardware error	always 0	always 0	Again write SD card, user another SD card. If the error still occurs: Contact SIGMATEK GmbH & Co KG	Error LED of the Safety module shines red
ERRVAL(86)	The content on the SD card does not correspond to the expected format. Possible cause(s): • hardware error • software error • user error	always 0	always 0	Again write SD card. If the error still occurs: Contact SIGMATEK GmbH & Co KG	Error LED of the Safety module shines red

ERRVAL(87)	The configuration data on the SD card does not match that on the flash. Possible cause(s): • user error	CRC of the configuration data on the SD card	CRC of the configuration data on the flash	Check if correct SD card is plugged in. If the correct SD card is plugged in, delete memory of the Safety CPU and try again. The configuration in the Flash may need to be deleted, if the SD card configuration is to be loaded. If the configuration is to be loaded from the SD card, the configuration in the flash must first be deleted and the system restarted with the SD card inserted.	Error LED of the Safety module shines red
ERRVAL(88)	The SD card was inserted while the module was turned on and not in service mode. Possible cause(s): • user error	always 0	always 0	Remove the SD card, cancel the error, change to the Service mode and insert the SD card.	Error LED of the Safety module shines red
ERRVAL(89)	Internal error in the process table.	identification of the error cause possible values: 0 to 1	invalid status or index	Contact SIGMATEK GmbH & Co KG	Error LED of the Safety module shines red

ERRVAL(90)	The measured value of the FPGA reference clock (REFCLK) is too small. This is a permanent error, which cannot be canceled. Possible cause(s): • hardware error • CPU • FPGA	number of measure edges	minimum number of flanks to measure	Contact SIGMATEK GmbH & Co KG	Error LED of the Safety module shines red
ERRVAL(91)	The measured value of the FPGA reference clock (REFCLK) is too large. This is a permanent error, which cannot be canceled. Possible cause(s): • hardware error • CPU • FPGA	number of measure edges	maximum number of flanks to measure	Contact SIGMATEK GmbH & Co KG	Error LED of the Safety module shines red
ERRVAL(92)	While waiting for the SSDO response, the time was exceeded. Possible cause(s): • runtime over the bus • processing time in the target module	always 0	always 0	Decrease runtimes.	Error LED of the Safety module shines red
ERRVAL(93)	The other controller has detected an error. Possible cause(s): • cause according to the error code of the other controller	error code of the other controller	always 0	Check error code of the other controller.	Error LED of the Safety module shines red

ERRVAL(94)	The configuration status of the other controller does not match. Possible cause(s): • module was turned off during configuration	configuration of the controller	configuration of the other controller	Configure module again.	Error LED of the Safety module shines red
ERRVAL(95)	A constant in the application memory was changed and no longer matches the values stored in the flash. Possible cause(s): • hardware error (defective flash, defective RAM) • software error	memory cell index of the incorrect constant in the application memory	index of the constant in the flash	Contact SIGMATEK GmbH & Co KG	Error LED of the Safety module shines red
ERRVAL(96)	After the power-on, the supply voltages have not reached the right values within a specified time limit. Possible cause(s): • hardware error	always 0	always 0	Check voltage supply.	Error LED of the Safety module shines red
ERRVAL(97)	An internal error occurred while processing the digital inputs. Possible cause(s): • software error	index of the first raw value from the digital inputs	index of the first raw value from the digital inputs	Contact SIGMATEK GmbH & Co KG	Error LED of the Safety module shines red
ERRVAL(98)	The reaction to the internal test could not be determined. Possible cause(s): • software error	bit mask for the digital inputs	always 0	Contact SIGMATEK GmbH & Co KG	Error LED of the Safety module shines red
ERRVAL(99)	An error was detected during the input test (internal test). Possible cause(s): • hardware error	status of the digital inputs	bit mask for the digital inputs	Contact SIGMATEK GmbH & Co KG	Error LED of the Safety module shines red

ERRVAL(100)	An internal test is active during the external test. Possible cause(s): • software error	always 0	always 0	Contact SIGMATEK GmbH & Co KG	Error LED of the Safety module shines red
ERRVAL(101)	The reaction to the external test could not be determined. Possible cause(s): • software error	bit mask for the digital inputs	always 0	Contact SIGMATEK GmbH & Co KG	Error LED of the Safety module shines red
ERRVAL(102)	External test: The pulse signal is not detected by a connected input. Possible cause(s): • cross-circuit	always 0	always 0	Compare wiring of the cross circuit with the application.	Error LED of the Safety module shines red
ERRVAL(103)	External test: The pulse signal of the other output is detected by a connected input. Possible cause(s): • cross-circuit	always 0	always 0	Compare wiring of the cross circuit with the application.	Error LED of the Safety module shines red
ERRVAL(104)	The Lo-Resolution timer is not working correctly (measured values are too small). Possible cause(s): • hardware error	value measured in the Lo-Resolution timer	lower limit for the measurement	Contact SIGMATEK GmbH & Co KG	Error LED of the Safety module shines red
ERRVAL(105)	The Lo-Resolution timer is not working correctly (measured values are too large). Possible cause(s): • hardware error	value measured in the Lo-Resolution timer	upper limit for the measurement	Contact SIGMATEK GmbH & Co KG	Error LED of the Safety module shines red

ERRVAL(106)	The millisecond timer is not working correctly (measured values are too small). Possible cause(s): • hardware error • software error	value measured in the millisecond timer	lower limit for the measurement	Contact SIGMATEK GmbH & Co KG	Error LED of the Safety module shines red
ERRVAL(107)	The millisecond timer is not working correctly (measured values are too large). Possible cause(s): • hardware error • software error	value measured in the millisecond timer	upper limit for the measurement	Contact SIGMATEK GmbH & Co KG	Error LED of the Safety module shines red
ERRVAL(108)	During startup, a timeout has occurred while waiting for the FPGA. Possible cause(s): • hardware error	always 0	always 0	Contact SIGMATEK GmbH & Co KG	Error LED of the Safety module shines red
ERRVAL(109)	The format of the info sector in the flash is incorrect. Possible cause(s): • module was never initialized (with the Clear-All command) • HW error in the flash	always 0	always 0	Configure module. If the error still occurs: Contact SIGMATEK GmbH & Co KG	Error LED of the Safety module shines red
ERRVAL(110)-ERRVAL(128)	The configuration data format in the flash is incorrect. Possible cause(s): • module was configured incorrectly • HW error in the flash	detailed information on the cause	detailed information on the cause	Configure module. If the error still occurs: Contact SIGMATEK GmbH & Co KG	Error LED of the Safety module shines red
ERRVAL(129)	Not used.				

ERRVAL(130)	A buffer was entered in a function call as a parameter. However, the buffer size is too large. Possible cause(s): • program error	actual buffer size	maximum buffer size	Contact SIGMATEK GmbH & Co KG	Error LED of the Safety module shines red
ERRVAL(131)	The wrong frame type was used for the SSDO command Possible cause(s): • error in the Safety tool	always 0	always 0	Contact SIGMATEK GmbH & Co KG	Error LED of the Safety module shines red
ERRVAL(132)	A Safety number for a remote module exists twice. Possible cause(s): • an error has occurred while determining the module Safety number using the topology path	index of the module in the remote module table	doubled module Safety number	Restart the application. Check all Safety numbers on uniqueness.	Error LED of the Safety module shines red
ERRVAL(133)	The micro controller is in the incorrect processor mode. Either the flags for the processor mode or for activating the interrupts in the program status register are set incorrectly or the wrong stack is used. Possible cause(s): • the processor mode does not switch correctly (due to hard or software errors)	flags set in the program status register or stack pointer value.	set value for the flags in the program status register or the upper/lower limit of the required stack area	Contact SIGMATEK GmbH & Co KG	Error LED of the Safety module shines red
ERRVAL(134)	The calculated output image in both controllers is different.	status of the local outputs in the first controller	status of the local outputs in the other controller	Contact SIGMATEK GmbH & Co KG	Error LED of the Safety module shines red

ERRVAL(135)	The 24 V1 DCOK line indicates that the voltage is not OK. Possible cause(s): • external voltage supply not connected • hardware error	always 0	always 0	Ensure that the external voltage supply for the pulse outputs in the Safety modules with digital inputs and the supply voltage for the outputs in Safety modules are correct. After applying the correct voltage, the error can be canceled with Quit Error or by restarting.	Error LED of the Safety module shines red DCOK LED does not shine
ERRVAL(136)	The Boolean display of an output has an invalid value. Possible cause(s): • software error (memory was overwritten in an disallowed location) • hardware error (defective RAM)	Index of the cell in the application memory containing the invalid value, 0xFFFFFFFF means that the error was detected while coding the SAFEBOOL value for the SPDO frame	invalid value	Contact SIGMATEK GmbH & Co KG	Error LED of the Safety module shines red
ERRVAL(137)	The values from the back-read outputs do not match the set values of the outputs. Possible cause(s): • hardware error (e.g. output transistor defective) • external error (i.e. short circuit, voltage supply for the outputs are missing) • software error	set values (bit 0 = 1st output)	actual values (bit 0 = 1st output)	Check voltage supply. If the error still occurs: Contact SIGMATEK GmbH & Co KG	LED of the safe output blinks

ERRVAL(138)	An error has occurred during the Watchdog test. This is a permanent error, which cannot be canceled. Possible cause(s): • hardware error	bit mask for identifying the test step in which the error was detected	actual test step	Contact SIGMATEK GmbH & Co KG	Error LED of the Safety module shines red
ERRVAL(139)-ERRVAL(141)	In the configuration, invalid parameters are assigned in the COPY command. Possible cause(s): • a defective configuration was loaded, Flash defective • defective flash	index of the source or destination	maximum number of available cells or upper/lower index limit	Contact SIGMATEK GmbH & Co KG	Error LED of the Safety module shines red
ERRVAL(142)	After activating the upper output semiconductor (HSS), at least one output is set to 1 although none of the lower output semiconductors (FET) were activated. This is a permanent error, which cannot be canceled. Possible cause(s): • output semiconductor (FET) defective	set value (bit 0 = 1st output) always 0	actual value of affected outputs (bit 0 = 1st output)	Contact SIGMATEK GmbH & Co KG	Error LED of the Safety module shines red
ERRVAL(143)	After deactivating the HSS output semiconductor, none of the previously set outputs are set to 0. Possible cause(s): • output semiconductor (HSS) defective • unacceptably high capacitive load	value of the outputs after shutting down the HSS (bit 0 = 1st output)	previously set outputs (bit 0 = 1st output)	Contact SIGMATEK GmbH & Co KG	LED of the safe output blinks

ERRVAL(144)	After deactivating the FET output semiconductor, the corresponding output is not set to 0. Possible cause(s): • output semiconductor (FET) defective • unacceptably high capacitive load	affected output (bit 0 = 1st output)	always 0	Contact SIGMATEK GmbH & Co KG	LED of the safe output blinks
ERRVAL(145)	After deactivating the FET semiconductor, the value of an output not connected to this FET has changed. Possible cause(s): • internal cross-circuit in the output circuit	status of the outputs (bit 0 = 1st output)	desired status of the outputs (bit 0 = 1st output)	Contact SIGMATEK GmbH & Co KG	LED of the safe output blinks
ERRVAL(146)	The cyclic process is not completed within the allowed time. Possible cause(s): • defective application	caller ID, with which the runtime trigger last occurred	code address, from which the process is resumed, after the interrupt function has ended	Increase cycle time of Safety CPU.	Error LED of the Safety module shines red
ERRVAL(147)	The logical program monitor has determined that a program component was not called for an unacceptably long time. Possible cause(s): • software error	< 100 Program component index >=100 program component identification, where the error was detected 100-107	RCO < 100 required time for the program components	Contact SIGMATEK GmbH & Co KG	Error LED of the Safety module shines red
ERRVAL(148)-ERRVAL(149)	The logical program monitor has determined that a program component was not called for an unacceptably long time. Possible cause(s): • software error	< 100 Program component index >= 100 program component identification, where the error was detected 100-107	RCO < 100 required time for the program components	Contact SIGMATEK GmbH & Co KG	Error LED of the Safety module shines red

ERRVAL(150)	The input value has not been updated for an unacceptably long time. Possible cause(s): • error in the input hardware • continuously changing input signal	affected input (bit 0 = 1st input)	maximum age	Contact SIGMATEK GmbH & Co KG	Error LED of the Safety module shines red
ERRVAL(151)-ERRVAL(152)	The reserved stack area was overwritten. Possible cause(s): • software error • stack-reserve dimensioned too small	ID of the affected stack area	always 0	Contact SIGMATEK GmbH & Co KG	Error LED of the Safety module shines red
ERRVAL(153)	The calculated output image in both controllers is different.	CRC of the send SPDO frame and the application memory of the first controller	CRC of the send SPDO frame and the application memory of the other controller	Contact SIGMATEK GmbH & Co KG	Error LED of the Safety module shines red
ERRVAL(154)	The information on the stored safety number of the remote module is inconsistent. Possible cause(s): • program error	index of searched module	number of elements in the remote module table	Contact SIGMATEK GmbH & Co KG	Error LED of the Safety module shines red
ERRVAL(155)-ERRVAL(197)	The CPU test has detected an error. Possible cause(s): • CPU error	always 0	always 0	Contact SIGMATEK GmbH & Co KG	Error LED of the Safety module shines red
ERRVAL(198)	The internal cycle time counter does not work correctly. Possible cause(s): • software error	last time difference	maximum time difference	Contact SIGMATEK GmbH & Co KG	Error LED of the Safety module shines red

ERRVAL(199)	The remote safety input value has exceeded the maximum age. Possible cause(s): • bus data exchange error • error in the hardware of the remote module • software error in the remote module	always 0	always 0	Check whether the standard communication for each required Safety module is intact. In addition, ensure that none of the non-required Safety modules is in the error mode. It can also be that the maximum transmission time was configured too low. The above points must be checked. If the error was corrected, it can be canceled with Quit Error or by restarting the system, errors are eliminated.	Error LED of the Safety module blinks
ERRVAL(200)	The required IRQ register test was not performed in the interrupt Possible cause(s): • software error	always 0	always 0	Contact SIGMATEK GmbH & Co KG	Error LED of the Safety module shines red

ERRVAL(201)-ERRVAL(205)	An unexpected exception has occurred. Possible cause(s): • software error	address of the interrupted code	with an exception outside of the FSB call: always 0 with an exception during the FSB call: - FSB ID in the lower 2 bytes - Object index of the upper 2 bytes	Contact SIGMATEK GmbH & Co KG	Error LED of the Safety module shines red
ERRVAL(206)	The system times for both controllers have to large a deviation. This is a permanent error, which cannot be canceled. Possible cause(s): • hardware error	determined drift between both controller system times	maximum allowed drift	Contact SIGMATEK GmbH & Co KG	Error LED of the Safety module shines red
ERRVAL(207)	The module type and module variant in the Firmware does not match the values stored in the unchangeable module parameters. Possible cause(s): • incorrect firmware	module type and variant of the firmware	module type and variant of the boot loader	Contact SIGMATEK GmbH & Co KG	Error LED of the Safety module shines red
ERRVAL(208)-ERRVAL(209)	The unchangeable module parameters are different in both controllers Possible cause(s): • hardware error • flash programmed incorrectly	module parameters of the first controller	module parameters of the other controller	Contact SIGMATEK GmbH & Co KG	Error LED of the Safety module shines red
ERRVAL(210)	The Firmware version is different in both controllers Possible cause(s): • incorrect firmware	firmware version of the first controller	firmware version of the other controller	Contact SIGMATEK GmbH & Co KG	Error LED of the Safety module shines red

ERRVAL(211)	An error was detected in a non-editable flash area during the ROM test. This is a permanent error, which cannot be canceled. Possible cause(s): • defective flash	information about the cause of the error	always 0	Contact SIGMATEK GmbH & Co KG	Error LED of the Safety module shines red
ERRVAL(212)	An error was detected in a non-editable flash area during the ROM test. This is a permanent error, which cannot be canceled. Possible cause(s): • defective flash	information about the cause of the error	always 0	Contact SIGMATEK GmbH & Co KG	Error LED of the Safety module shines red
ERRVAL(213)-ERRVAL(217)	An error was detected in an editable flash area during the ROM test Possible cause(s): • defective flash • module was deactivated while programming the flash	information about the cause of the error	always 0	Contact SIGMATEK GmbH & Co KG	Error LED of the Safety module shines red
ERRVAL(218)	After activating the lower output semiconductor (FET), at least one output is set to 1 although none of the upper output semiconductors (HSS) were activated. This is a permanent error, which cannot be canceled. Possible cause(s): • Output semiconductor (HSS) defective	set value (bit 0 = 1st output) always 0	actual value, affected outputs (bit 0 = 1st output)	Contact SIGMATEK GmbH & Co KG	Error LED of the Safety module shines red
ERRVAL(219)	The content of an SSDO answer in both controllers is different Possible cause(s): • software error	always 0	always 0	Contact SIGMATEK GmbH & Co KG	Error LED of the Safety module shines red

ERRVAL(220)	An attempt was made to write and invalid length of data to the flash. Possible cause(s): • program error	always 0	always 0	Contact SIGMATEK GmbH & Co KG	Error LED of the Safety module shines red
ERRVAL(221)	An attempt was made to read a buffer, whereby the buffer contains less than the required amount data. Possible cause(s): • software error • defective Safety tool (SSDO command)	number of bytes that should be read from the buffer	buffer size	Contact SIGMATEK GmbH & Co KG	Error LED of the Safety module shines red
ERRVAL(222)	The test mode or maximum idle time has elapsed.	0 the test mode time has elapsed	always 0	After finished test mode, again down-load the configura-tion and restart.	Error LED of the Safety module shines red
		1 time for the maximum Idle time has elapsed 2 time for the maximum Check Config time has elapsed	always 0	After finished Idle time resp. Check Config time cancel the error and restart.	
ERRVAL(223)	The processing time for the inter-nal test is incorrect. An attempt was made start a test while the previous test is still running. Possible cause(s): • software error	bit mask of the inputs	always 0	Contact SIGMATEK GmbH & Co KG	Error LED of the Safety module shines red

ERRVAL(224)	The processing time for the internal test is incorrect. An attempt was made start a test while the previous test is still running. Possible cause(s): • software error	signal output A (=1) or B (=0)	always 0	Contact SIGMATEK GmbH & Co KG	Error LED of the Safety module shines red
ERRVAL(225)	The configuration status cannot be set to configured, as the areas belonging to the CRCs are invalid. Possible cause(s): • a firmware updated was performed • module was configured incorrectly • hardware error in the flash	always 0	always 0	Contact SIGMATEK GmbH & Co KG	Error LED of the Safety module shines red
ERRVAL(226)	The configuration status cannot be set to configured, as the CRC given by the caller does not match the actual one. The module does not switch to the error status. Error displayed in the console window of the SAFETYDesigner. Possible cause(s): • module was configured incorrectly • hardware error in the flash	always 0	always 0	The Safety module must be reconfigured. If the error still occurs: Contact SIGMATEK GmbH & Co KG	Error LED of the Safety module shines red

ERRVAL(227)	The configuration data format in the flash is incorrect. Possible cause(s): • module was configured incorrectly • hardware error in the flash	actual configuration data	configuration status setting	Contact SIGMATEK GmbH & Co KG	Error LED of the Safety module shines red
ERRVAL(228)	The configuration status cannot be set to configured, as the configuration is deleted. Possible cause(s): • module was configured incorrectly • hardware error in the flash	always 0	always 0	Contact SIGMATEK GmbH & Co KG	Error LED of the Safety module shines red
ERRVAL(229)	The configuration is not in the status by which the Verified flag can be set. Possible cause(s): • the configuration has never been distributed • the configuration was written to the Safety CPU in the development mode	always 0	always 0	Do not start program in Developer mode. Restart program and thus trigger distribution.	Error LED of the Safety module shines red
ERRVAL(230)	The SSDO command cannot be executed due to missing authorization. Possible cause(s): • SAFETYDesigner error	always 0	always 0	Again go online with the SAFETYDesigner and again execute commands.	Error LED of the Safety module shines red

ERRVAL(231)	When going online, no sessions could be opened. Possible cause(s): • another SAFETYDesigner is already online	always 0	always 0	Check if several SAFETYDesigners are online, only one SAFETYDesigner may access.	Error LED of the Safety module shines red
ERRVAL(232)	The maximum number of remote modules has been exceeded.	number of remote modules	maximum number of remote modules allowed	Check and accordingly change the number of remote modules.	Error LED of the Safety module shines red
ERRVAL(233)	The module Type coded in the CFG pins does not match the Firmware Possible cause(s): • incorrect firmware	CFG pins according to the hardware	CFG pins according to the firmware	Contact SIGMATEK GmbH & Co KG	Error LED of the Safety module shines red
ERRVAL(234)	The SSDO command cannot be executed in this runtime status. Possible cause(s): • SAFETYDesigner error	always 0	always 0	Again go online with the SAFETYDesigner and again execute commands.	Error LED of the Safety module shines red
ERRVAL(235)	The parameters in the header of the new Firmware do not match this module. Possible cause(s): • incorrect firmware	parameters in the firmware	parameters in the boot code	A module that has compatible firmware must be used.	Error LED of the Safety module shines red

ERRVAL(236)	An error has occurred while accessing the SD card. Possible cause(s): • SD card has been removed • defective or incompatible SD card	identification of the error cause	last error	Check whether the SD card was removed. If the SD card was not removed, it must be exchanged. The error can be reset with the removal of the SD card and the "Quit Error" command. If the error still occurs: Contact SIGMATEK GmbH & Co KG	Error LED of the Safety module shines red

ERRVAL(237)	Read/write error in the interpreter code of the configuration. During the configuration test, one of the following errors were detected: a) An attempt was made to write to a cell, which was already written to from another source (e.g. if 2 COPY commands with the same destination exist or if a COPY command provides a non-writable cell as the destination). b) An attempt was made to read a non-readable cell. A cell cannot be read when there is no corresponding source from which it was written (not initialized) or when it cannot be used as the source of a COPY command (e.g. the header of the object memory). Possible cause(s): • defective configuration loaded • defective flash	index of the incorrect cell	0 for a write error 1 for a read error	Contact SIGMATEK GmbH & Co KG	Error LED of the Safety module shines red
ERRVAL(238)	The POST (Power On Self-Test) has not been completely processed Possible cause(s): • software error	bit mask with the outstanding POST test steps	always 0	An error was detected during the start-up test. The error type is displayed in the SAFETYDesigner. The error can then be corrected.	Error LED of the Safety module shines red

ERRVAL(239)	The sector buffer on the SD card to which should be written is different in both controllers Possible cause(s): • software error	always 0	always 0	Contact SIGMATEK GmbH & Co KG	Error LED of the Safety module shines red
ERRVAL(240)	The force mode was incorrectly ended. Possible cause(s): • a session or login time-out has occurred due to an interruption in online communication with the SAFETYDesigner • change the login level (e.g. logout) • close the session in the SAFETYDesigner	always 0	always 0	In case of an interrupt of the communication between SAFETYDesigner and the module, cancel the error.	
ERRVAL(241)	The password format on the SD card is incorrect. Possible cause(s): • SD card defective • contents were changed retroactively	always 0	always 0	Again write SD card, use different SD card. If the error still occurs: Contact SIGMATEK GmbH & Co KG	Error LED of the Safety module shines red
ERRVAL(242)	Internal error while processing the STDO. Possible cause(s): • software error	length of the STDO that should be written	maximum length of a STDO	Contact SIGMATEK GmbH & Co KG	Error LED of the Safety module shines red
ERRVAL(243)	The information on a safety number for a remote module is required but not available or invalid. Possible cause(s): • software error	value of the valid module safety number (0 or 0xFFFFffff)	always 0	Contact SIGMATEK GmbH & Co KG	Error LED of the Safety module shines red

ERRVAL(244)	In the interpreter code of the configuration, an FSB identification was entered for which no corresponding code exists. Possible cause(s): • error in the Safety tool	function block-ID	always 0	Contact SIGMATEK GmbH & Co KG	Error LED of the Safety module shines red
ERRVAL(245)	A value entered in the configuration data is too large. Possible cause(s): • value input in the SAFETYDesigner too large	indicates which parameter is too large 0 test time in the temporary operational status 1 cycle time for the runtime monitor 2 maximum age of the remote input 3 filter time or a local input	limit	Set value according to the maximum size.	Error LED of the Safety module shines red
ERRVAL(246)-ERRVAL(255)	Function block returned an error code. The following error codes are returned by the function blocks and are therefore not contained in the Firmware. Possible cause(s): • software error			Contact SIGMATEK GmbH & Co KG	Error LED of the Safety module shines red
ERRVAL(1000)	No errors			normal operation	
ERRVAL(1001)	The cyclic process is not completed within the allowed time. Possible cause(s): • application errors	actual cycle time microseconds (the maximum of both values from controller 1 and 2)	cycle time limit in microseconds	Configuration must be changed, e.g. raising the maximum cycle time of the Safety CPU. Cancel error with "Quit Error”.	Error LED of the Safety module shines red

ERRVAL(1002)	A buffer was entered in a function call as a parameter. However, the buffer size is too small. Possible cause(s): • program error	actual buffer size or with a value >= 0x1000, identification program line containing the error (possible values 0x1000-0x100B)	required buffer size	Contact SIGMATEK GmbH & Co KG	Error LED of the Safety module shines red
ERRVAL(1003)	It was determined that a global variable was overwritten. Possible cause(s): • program error • defective RAM	affected overwritten variable possible values: 0 actual error code	always 0	Contact SIGMATEK GmbH & Co KG	Error LED of the Safety module shines red
ERRVAL(1004)	Program code was run that, according to program logic, should never be run. Possible cause(s): • program error • defective CPU	identification of the location of the code that was run possible values: 0 to 104	always 0	Contact SIGMATEK GmbH & Co KG	Error LED of the Safety module shines red
ERRVAL(1005)	While accessing an array, the index exceeds the array limits. Possible cause(s): • program error	identification of the error cause possible values: 0 to 57	maximum possible array index	Contact SIGMATEK GmbH & Co KG	Error LED of the Safety module shines red
ERRVAL(1006)	Invalid parameter value in a function call (NULL pointer). Possible cause(s): • program error	identification of the error cause possible values: 0 to 30	always 0	Contact SIGMATEK GmbH & Co KG	Error LED of the Safety module shines red

ERRVAL(1007)	During the RAM test, a read or CRC-32 error was detected in the March C algorithm. This is a permanent error, which cannot be canceled. Possible cause(s): • hardware error • RAM, flash, address, data line programming error • RAM test was run with unlocked interrupts	affected test step	affected area in the RAM	Contact SIGMATEK GmbH & Co KG	Error LED of the Safety module shines red
ERRVAL(1008)	During the RAM test, a read or CRC-32 error was detected in the Galpat algorithm. This is a permanent error, which cannot be canceled. Possible cause(s): • hardware error • RAM, flash, address, data line programming error • RAM test was run with unlocked interrupts	affected test step	affected areas in the RAM (CRC32 check and GalPat check)	Contact SIGMATEK GmbH & Co KG	Error LED of the Safety module shines red
ERRVAL(1009)	The configuration of the required modules is not correct. Possible cause(s): • exchange of several modules • module configured incorrectly • incompatible interface frame (wrong CRC)	0 more than 1 module is missing 1 a module is missing and a module update was already performed previously.	if Reason-Code 0 is between 0 and 1: always 0	If more than 1 module was exchanged, the application has to be downloaded again. In case of a wrong configuration, again download the application.	Error LED of the Safety module shines red
		2 nothing can be distributed to the missing module (S-CPU)	if Reason-Code 0 is 2: Safety number of the remote module		

		3 the maximum number of retries for the configuration distribution or configuration test has been exceeded.	if Reason-Code 0 is 3: number of retries	Check whether hardware structure corresponds with the application; change application accordingly. In case of a wrong interface CRC the writing interface has to be exported again and imported on the reading side. Application has to be downloaded again. Cancel error with Quit Error.	
		4 while trying to send the configuration, the error status was detected in the target module	if Reason-Code 0 is 4: runtime status of the remote module		
		5 at least one local SDI module is missing 6 at least one local Safety Interface module is missing 7 at least one local STO module is missing 8 at least one local SRO module is missing 9 a module (master module) tried to write the configuration before its own configuration was deleted and set to master 10 a slave module has determined that the remote modules are not configured correctly.	if Reason-Code 0 is between 5 and 10: always 0		

		11 a local input module is in the wrong slot (count starts at 1) 12 a local output module is in the wrong slot (count starts at 1) 13 a DINT input module is in the wrong slot (count starts at 1)	if Reason-Code 0 is between 11 and 13: module slot number		
		14 number of local inputs incorrect 15 number of local outputs incorrect 16 an attempt was made to activate a missing local module			
		17 an expansion module could not be configured (count starts at 1)	if Reason-Code 0 is 17: module slot number		
		18 too many expansion modules are connected 19 too few expansion modules are connected 20 wrong Safety Interface module connected			
ERRVAL(1010)	The RAM memory, which is used for data structures with configuration-dependent size, is too small. Possible cause(s): • too many modules • too big application	0 data for IO lists and removed modules 1 Status of the FSoE connection 2 FSoE buffer	always 0	Check size of application and downsize it, again download application, cancel error with Quit Error. Check number of modules, remove according modules, cancel error with Quit Error.	Error LED of the Safety module shines red

ERRVAL(1011)	While distributing the configuration data to a remote module, the maximum number of errors was exceeded. Possible cause(s): • data exchange error • another module is defective	error code of the last distribution attempt	return code of the last executed SSDO instruction	Trigger distribution several times. If modules are defective: Contact SIGMATEK GmbH & Co KG	Error LED of the Safety module shines red
ERRVAL(1012)	An error has occurred during exception handling. Possible cause(s): • software error	0 the maximum number of nested TRY-CATCH-ETRY blocks was exceeded 1 the end of a TRY-CATCH-ETRY block has been reached without a starting TRY. 2 exception not in the normal program mode 3 No TRY block available to intercept the exception	number of open TRY-CATCH-ETRY blocks	Contact SIGMATEK GmbH & Co KG	Error LED of the Safety module shines red
ERRVAL(1013)	After distributing the configuration data to a remote module, a difference was detected during back reading.	module index of the affected remote module	always 0	Again download application and restart. If the error still occurs: Contact SIGMATEK GmbH & Co KG	Error LED of the Safety module shines red
ERRVAL(1014)	The interpreter code was not found in the configuration data. Possible cause(s): • defective configuration • software error	always 0	always 0	Again download application and restart. If the error still occurs: Contact SIGMATEK GmbH & Co KG	Error LED of the Safety module shines red

ERRVAL(1015)	In the interpreter list, of the configuration an FSB was entered for which no function block code exists. Possible cause(s): • a defective configuration was loaded, Flash defective • defective flash	FSB ID of the not found FSB code	always 0	Contact SIGMATEK GmbH & Co KG	Error LED of the Safety module shines red
ERRVAL(1016)	An error was detected in a non-editable flash area during the ROM test. This is a permanent error, which cannot be canceled. Possible cause(s): • defective flash	information about the cause of the error	always 0	Contact SIGMATEK GmbH & Co KG	Error LED of the Safety module shines red
ERRVAL(1017)	The called FSB returned an error code.	error code of the FSB (always unlike 0)	FSB ID and object index of the affected FSB	Contact SIGMATEK GmbH & Co KG	Error LED of the Safety module shines red

ERRVAL(1018)	The remote safe input of a missing optional module (remote module or Safety Interface module) has reached the maximum age.	always 0	always 0	Check whether the standard communication for each required Safety module is intact. In addition, ensure that none of the non-required Safety modules is in the error mode. It can also be, that the maximum transmission time was configured too low. The above points must be checked. If the error was corrected, it can be canceled with Quit error or by restarting the system, errors are eliminated.	Error LED of the Safety module blinks
ERRVAL(1019)	After calling the FSB, a not allowed value was found in the application memory. Possible cause(s): • defective FSB	actual pattern at the end of the object memory	pattern setting at the end of the object memory	Contact SIGMATEK GmbH & Co KG	Error LED of the Safety module shines red
ERRVAL(1020)	The called FSB did not increment the counter variable. Possible cause(s): • defective FSB	actual value in the counter variable	value setting in the counter variable	Contact SIGMATEK GmbH & Co KG	Error LED of the Safety module shines red

ERRVAL(1021)	An error was detected during administration of the RAM memory for the data structures with a configuration-dependent size. Possible cause(s): • software error	always 0	always 0	Contact SIGMATEK GmbH & Co KG	Error LED of the Safety module shines red
ERRVAL(1022)	The answer to an SSDO request is not yet available. Possible cause(s): • runtime over the bus • processing time in the target module too big	always 0	always 0	Increase time on the bus. If the error still occurs: Contact SIGMATEK GmbH & Co KG	Error LED of the Safety module shines red
ERRVAL(1023)	In an SSDO answer, an error is displayed in the return code field. Possible cause(s): • error in the remote module	always 0	always 0	Check remote modules for errors. If the error still occurs: Contact SIGMATEK GmbH & Co KG	Error LED of the Safety module shines red
ERRVAL(1024)	In an SSDO answer, less data is received as expected. Possible cause(s): • error in the remote module	actual length of the data in the SSDO answer	set length of the data in the SSDO answer	Contact SIGMATEK GmbH & Co KG	Error LED of the Safety module shines red
ERRVAL(1025)	An error was detected while testing the checksums with the constant elements in the configuration tables in RAM. Possible cause(s): • software error • defective RAM	identification of the table possible values: 0 to 11	always 0	Contact SIGMATEK GmbH & Co KG	Error LED of the Safety module shines red

ERRVAL(1026)	Access to the application memory was not possible. Possible cause(s): • software error • incorrect query from the SAFETYDesigner	0	if Reason-Code 0 = 0: both lower bytes contain the detected invalid cells index; both upper bytes contain the number of available cells.	Contact SIGMATEK GmbH & Co KG	Error LED of the Safety module shines red
		1	if Reason-Code 0 = 1: invalid cell index		
		2	if Reason-Code 0 = 2: invalid address offset		
		3	if Reason-Code 0 = 3: both lower bytes contain the address offset; both upper bytes contain the length		
		4	if Reason-Code 0 = 4: invalid length (not divisible by 4)		
ERRVAL(1027)	An invalid block header was detected in a flash memory area. Possible cause(s): • hardware error (defective flash) • programming process was interrupted	always 0	always 0	Contact SIGMATEK GmbH & Co KG	Error LED of the Safety module shines red
ERRVAL(1028)	During a login attempt, an invalid password was entered. Error displayed in the console window of the SAFETYDesigner. Possible cause(s): • typing error • hacking attempt	always 0	always 1	The password must be re-entered.	Continued normal operation
ERRVAL(1029)		0	always 0		

	An SSDO frame contains an invalid parameter. Possible cause(s): • software error	1	always 0	Contact SIGMATEK GmbH & Co KG	Error LED of the Safety module shines red
		2	always 0		
		3	always 0		
		4	if Reason-Code 0 = 4: the lower 2 bytes contain the size of the transferred buffer; the upper 2 bytes contain the maximum size		
ERRVAL(1030)	An SSDO frame is missing a parameter. Possible cause(s): • software error	used in the firmware for the hardware test only		Contact SIGMATEK GmbH & Co KG	Error LED of the Safety module shines red
ERRVAL(1031)	Internal error while processing the SSDO Possible cause(s): • software error	length of the SSDO that should be written	maximum length of an SSDO	Contact SIGMATEK GmbH & Co KG	Error LED of the Safety module shines red
ERRVAL(1032)	The SSDO packet contains an invalid command byte. Possible cause(s): • software error	invalid command	always 0	Contact SIGMATEK GmbH & Co KG	Error LED of the Safety module shines red
ERRVAL(1033)	While trying to change a password, an invalid new password was entered. Possible cause(s): • software error • defective SAFETYDesigner	always 0	always 0	If an incorrect password is entered, a warning is triggered in the SAFETYDesigner. If Error 33 is triggered, it is an internal operating system error. Contact SIGMATEK GmbH & Co KG	Error LED of the Safety module shines red

ERRVAL(1034)	The SSDO packet contains an invalid virtual address. Possible cause(s): • software error	identification of the error cause possible values: 0 to 1	always 0	Contact SIGMATEK GmbH & Co KG	Error LED of the Safety module shines red
ERRVAL(1035)	While processing the SSDO, an internal buffer was determined to be too small for the required data amount. Possible cause(s): • software error • defective SAFETYDesigner	identification of the error cause possible values: 0 to 1	always 0	Contact SIGMATEK GmbH & Co KG	Error LED of the Safety module shines red
ERRVAL(1036)	An error was detected during the Safety Interface controller start-up test. Possible cause(s): • hardware error	identification of the error cause possible values: 0 test report could not be sent 1 no answer to the test report was received 2 the data for the test report received is incorrect	always 0	Contact SIGMATEK GmbH & Co KG	Error LED of the Safety module shines red
ERRVAL(1037)	The remnant variables are inconsistent. Possible cause(s): • hardware error • software error	0 in the POST, it was determined that the checksum of the remnant variables in the EEPROM is incorrect. 1 an error in the consistency of the remnant variables was detected during cyclic processing.	always 0	Contact SIGMATEK GmbH & Co KG	Error LED of the Safety module shines red

ERRVAL(1038)	A watchdog error has occurred. Possible cause(s): • software error	address of the code	with an exception outside of the FSB call: always 0 with an exception during the FSB call: - FSB ID in the lower 2 bytes - Object index of the upper 2 bytes	Contact SIGMATEK GmbH & Co KG	Error LED of the Safety module shines red
ERRVAL(1039)	The boot loader version is incorrect. Possible cause(s): • incorrect firmware	available boot loader version	minimum required boot loader version	Contact SIGMATEK GmbH & Co KG	Error LED of the Safety module shines red
ERRVAL(1040)	While accessing the internal IO bus, an error has occurred. Possible cause(s): • hardware error • module was disconnected	0 error while reading a byte 1 error while reading a 2-byte value	if Reason-Code is between 0 and 1: Byte 0 and 1 are the address of the error Byte 2 and 3 are the address of the module; divide this value by 0x400 to get the position of the module (starting with 0)	If a module has been disconnected, connect it and restart. If the error still occurs: Contact SIGMATEK GmbH & Co KG	Error LED of the Safety module shines red
		2 error while writing a byte 3 error while writing a 2-byte value	if Reason-Code is between 2 and 3: Byte 0 and 1 are the address of the error Byte 2 and 3 is the value to write		
		4 different controller values for the module ID			

		5 time error while waiting for the Grant SPI master 6 time error while waiting for Ready from the SPI master 7 incorrect SPI Flash length 8 incorrect SPI Flash CRC	if Reason-Code 0 is between 5 and 8: position of the module where the error occurred (starting with 0)		
		9 different Safety numbers in both controllers			
		10 no unique Safety numbers in the expansion modules	if Reason-Code 0 = 10: value of the Safety number, which is doubled		
		11 when determining the serial number, both controllers provide different values	if Reason-Code 0 = 11: position of the module where the error occurred (starting with 0)		
		12 different number of expansion modules in both controllers	if Reason-Code 0 = 12: Byte 0: number of IO modules detected on the controller Byte 1: number of IO modules detected on the other controller		
		13 Safety number in an expansion module missing	if Reason-Code 0 = 13: position of the module where the error occurred (starting with 0)		

ERRVAL(1041)	The values of the back-read outputs, which are already in error status, are not at 0. Possible cause(s): • hardware error (e.g. output transistor defective), • external error (e.g. short circuit) • software error	outputs that are not enabled (bit 0 = 1st output)	actual value (bit 0 = 1st output)	Contact SIGMATEK GmbH & Co KG	Error LED of the Safety module shines red
ERRVAL(1042)	When testing the OUTRESET signal, not all outputs are set to 0. Possible cause(s): • hardware error (e.g. output transistor defective) • external error (e.g. short circuit) • software error	tested outputs (bit 0 = 1st output)	actual value (bit 0 = 1st output)	Contact SIGMATEK GmbH & Co KG	Error LED of the Safety module shines red
ERRVAL(1043)	A local expansion module is in error status. Possible cause(s): • error in the expansion module	0 expansion module error 1 0-based expansion module position	Reason-Code 0 of the expansion module	Exchange optional module. If the error still occurs: Contact SIGMATEK GmbH & Co KG	Error LED of the Safety module shines red

ERRVAL(1044)	In a local extension module an error occurred in the initialization phase. Possible cause(s): • error in the expansion module • incorrect configuration	0 Current values cannot be read from the SNC module 1 No current values are available, which can be written to the SNC module 2 A SNC module exists on a slave Safety CPU 3 A SNC module with a not supported version number exists	0 based position of the extension module	Check current values, set Safety CPU to master mode, exchange SNC module If the error still occurs: Contact SIGMATEK GmbH & Co KG	Error LED of the Safety module shines red
ERRVAL(1045)	The extension module belonging to the input or output does not exist. Possible cause(s): • an optional module is not connected	0 digital output 1 digital input 2 SNC module	always 0	Check optional modules.	Error LED of the Safety module shines red
ERRVAL(1046)	Too few resources for the desired function available. Possible cause(s): • incorrect configuration	always 0	always 0	Check configuration. If the error still occurs: Contact SIGMATEK GMBH & CO KG	Error LED of the Safety module shines red
ERRVAL(1047)-ERRVAL(1048)	Not used				
ERRVAL(1049)	Testing the LOG memory in the POST determined that both sectors are full. Possible cause(s): • hardware error • program error	always 0	always 0	Contact SIGMATEK GmbH & Co KG	Error LED of the Safety module shines red

ERRVAL(1050)	Testing the LOG memory in the POST determined that both sectors contain data but are not full. Possible cause(s): • hardware error • program error	always 0	always 0	Contact SIGMATEK GmbH & Co KG	Error LED of the Safety module shines red
ERRVAL(1051)	The messages in the LOG memory are not continuous (holes in LOG memory). Possible cause(s): • program error	start address of the first empty entry located in the LOG memory	always 0	Contact SIGMATEK GmbH & Co KG	Error LED of the Safety module shines red
ERRVAL(1052)	The information on the stored safety number of the remote module is inconsistent Possible cause(s): • program error	always 0xFFFFFFFF	always 0xFFFFFFFF	Contact SIGMATEK GmbH & Co KG	Error LED of the Safety module shines red
ERRVAL(1053)	The SSDO command cannot be executed in the actual status. Possible cause(s): • module is running the boot code	always 0	always 0	Restart. If the error still occurs: Contact SIGMATEK GmbH & Co KG	Error LED of the Safety module shines red
ERRVAL(1054)	An attempt was made to access a memory area (flash or SD card) to which no access is allowed or possible. Possible cause(s): • program error • SAFETYDesigner error	always 0	always 0	Contact SIGMATEK GmbH & Co KG	Error LED of the Safety module shines red

ERRVAL(1055)	A time-out has occurred while programming the Flash Possible cause(s): • hardware error	identification of the error cause	identification of the error cause	Contact SIGMATEK GmbH & Co KG	Error LED of the Safety module shines red
ERRVAL(1056)	During a status change in the STM module it was determined that a change is already active. Possible cause(s): • program error	always 0	always 0	Contact SIGMATEK GmbH & Co KG	Error LED of the Safety module shines red
ERRVAL(1057)	When activating the timer in the STM module it was determined that a timer is already active. Possible cause(s): • program error	always 0	always 0	Contact SIGMATEK GmbH & Co KG	Error LED of the Safety module shines red
ERRVAL(1058)	Not all required flags are set for a query in the STM module. Possible cause(s): • program error	flags that should be set	flags that currently are set	Contact SIGMATEK GmbH & Co KG	Error LED of the Safety module shines red
ERRVAL(1059)	The diagnostic code or the login status on the HGW login function block has an incorrect value Possible cause(s): • SAFETYDesigner error • programming error	serves to identify the error cause 1 Diagnosis code took an invalid value 2 Login status took an invalid value	value of the diagnosis code or login status	Contact SIGMATEK GmbH & Co KG	Error LED of the Safety module shines red

ERRVAL(1060)	An attempt was made to suppress the cyclic CAN messages while this is not possible. Possible cause(s): • Configuration error	1 A module is configured that requires the CAN messages (e.g. SIB or HBG) 2 A module has been detected on CAN that requires the CAN messages (e.g. SIB or HBG)	always 0	Contact SIGMATEK GmbH & Co KG	Error LED of the Safety module shines red
ERRVAL(1061)	An error occurred while programming the external flash. Possible cause(s): • hardware error	serves to identify the cause of the error	serves to identify the cause of the error	Contact SIGMATEK GmbH & Co KG	Error LED of the Safety module shines red
ERRVAL(1062)	One of the ADC channels for voltage and temperature monitoring has not delivered a valid measured value.	serves to identify the cause of the error 0: Temperature 1: 1V8 2: 5V0 4-6: ADC configuration failed 7: ADC has not delivered a measured value despite retry	always 0	Contact SIGMATEK GmbH & Co KG	Error LED of the Safety module shines red
ERRVAL(1063)	One of the ADC channels for voltage and temperature monitoring has left the valid value range.	serves to identify the cause of the error 0: Temperature 1: 1V8 2: 5V0 3: 24V	measured value	Contact SIGMATEK GmbH & Co KG	Error LED of the Safety module shines red

ERRVAL(1064)	An error occurred during the cyclic test of the OUTRESET watchdog. Possible cause(s): • hardware error	serves to identify the cause of the error 1: Test was not finished 2: Response to suspen-sion of toggle signal did not occur in time 3: Watchdog output was already active at startup	always 0	Contact SIGMATEK GmbH & Co KG	Error LED of the Safety module shines red
ERRVAL(1065)	An error has occurred during an I2C access (e.g. EEPROM/EE-RAM). Possible cause(s): • hardware error	serves to identify the cause of the error	serves to identify the cause of the error	Contact SIGMATEK GmbH & Co KG	Error LED of the Safety module shines red
ERRVAL(1066)	The output is outside the value range of the FSoE output. Possible cause: • Incorrect application, • Error in SafetyDesigner, • Program error	Byte 0: Limit that has been violated 0: Signed minimum 1: Signed maximum 2: Unsigned maximum Byte 1: Size of the output in the FSoE frame in bits Byte 2/3: Index of the removed output	Value did not fit the FSoE frame.	Check the values in the application; Contact SIGMATEK GmbH & Co KG	Error LED on the safety module lights up red
ERRVAL(1067)	The FSoE connection between the HGW module and the safety CPU has been broken off uncontrolla-bly. Possible cause(s): • connection disturbed • distance between modules too great	always 0	always 0	Error acknowledge-ment and renewed logon	Error LED of the Safety module shines red

ERRVAL(1068)	Invalid parameter value in a function call. Possible cause(s): • program error	identification of the error cause possible values: 0 to 107 71: Disabling the Z-pulse on the SNC021 is not permitted.	identification of the error cause	Contact SIGMATEK GmbH & Co KG For additional info 71: Enable the Z-pulse on the SNC021	Error LED of the Safety module shines red
ERRVAL(1069)	The space reserved in the SPDO for the safety values is too small. Possible cause(s): • software error	index of the most significant bytes of the safety values to send	maximum size of the Safety values to send	Contact SIGMATEK GmbH & Co KG	Error LED of the Safety module shines red
ERRVAL(1070)	Cross communication does not work (transmission error). Possible cause(s): • hardware error	1 Post error during self-test 2 error in the UART detected	error flags	Contact SIGMATEK GmbH & Co KG	Error LED of the Safety module shines red
ERRVAL(1071)	Not used				
ERRVAL(1072)	A division by 0 was attempted. Possible cause(s): • software error	always 0	always 0	Contact SIGMATEK GmbH & Co KG	Error LED of the Safety module shines red
ERRVAL(1073)	An unexpected value was received through the cross communication. Possible cause(s): • software error	value received	identification of the error cause	Contact SIGMATEK GmbH & Co KG	Error LED of the Safety module shines red
ERRVAL(1074)	The logical program monitor has determined that a program component was not run in the Op/OpTemp mode. Possible cause(s): • software error	program component identification	always 0	Contact SIGMATEK GmbH & Co KG	Error LED of the Safety module shines red

ERRVAL(1075)	The values for the local inputs that were read into both controls have different values for an unacceptably long time. Possible cause(s): • hardware error • input circuit	bit mask with the inputs of the controller	bit mask with the inputs of the other controller	Contact SIGMATEK GmbH & Co KG	Error LED of the Safety module shines red
ERRVAL(1076)	Cross communication does not work (timeout). Possible cause(s): • hardware error • software error	always 0	always 0	Contact SIGMATEK GmbH & Co KG	Error LED of the Safety module shines red
ERRVAL(1077)	The contents of an STDO answer in both controllers are different. Possible cause(s): • software error	0 or 1 depending on the type of error	always 0	Contact SIGMATEK GmbH & Co KG	Error LED of the Safety module shines red
ERRVAL(1078)	The runtime monitor was falsely deactivated in an operation runtime status. Possible cause(s): • software error	identification of the call from which the monitor was deactivated	always 0	Contact SIGMATEK GmbH & Co KG	Error LED of the Safety module shines red
ERRVAL(1079)-ERRVAL(1081)	Cross communication does not wok (unexpected value received). Possible cause(s): • hardware error • software error	value received via cross communication	expected value (= set value)	Contact SIGMATEK GmbH & Co KG	Error LED of the Safety module shines red

ERRVAL(1082)	The calculated output image in both controllers is different. Possible cause(s): • software error • hardware error	index of the cell in the application memory whose contents do not match the other controller	contents of the cell run in Reason-Code 0	Contact SIGMATEK GmbH & Co KG	Error LED of the Safety module shines red
ERRVAL(1083)	The other controller is no longer synchronized during cross communication. This is not an error, which triggers the safe status. In reaction to this error, the controllers resynchronize, exchange information and the decision is made whether to trigger the safe status or not. Possible cause(s): • one controller has detected an error, the other has not	always 0	always 0	Cancel error, optionally restart system. If the error still occurs: Contact SIGMATEK GmbH & Co KG	Error LED of the Safety module shines red
ERRVAL(1084)	The contents of the SD card could not be loaded because configuration in the flash is not available and also not deleted. Possible cause(s): • user error	always 0	always 0	Delete memory of the Safety CPU and try again.	Error LED of the Safety module shines red
ERRVAL(1085)	The SD card could not be initialized. Possible cause(s): • hardware error	always 0	always 0	Use different SD card. If the error still occurs: Contact SIGMATEK GmbH & Co KG	Error LED of the Safety module shines red

ERRVAL(1086)	The content on the SD card does not correspond to the expected format. Possible cause(s): • hardware error • software error • user error	always 0	always 0	Again write SD card. If the error still occurs: Contact SIGMATEK GmbH & Co KG	Error LED of the Safety module shines red
ERRVAL(1087)	The configuration data on the SD card does not match that on the flash. Possible cause(s): • user error	CRC of the configuration data on the SD card	CRC of the configuration data on the flash	The configuration in the Flash may need to be deleted, if the SD card configuration is to be loaded. If the configuration is to be loaded from the SD card, the configuration in the flash must first be deleted and the system restarted with the SD card inserted.	Error LED of the Safety module shines red
ERRVAL(1088)	The SD card was inserted while the module was turned on and not in service mode. When starting the application a dongle is plugged in, the service mode cannot be left. Possible cause(s): • user error	always 0	always 0	Remove the SD card, cancel the error, change to the Service mode and insert the SD card. Remove the dongle, cancel the error and restart.	Error LED of the Safety module shines red
ERRVAL(1089)	Internal error in the process table.	identification of the error cause possible values: 0 to 1	invalid status or index	Contact SIGMATEK GmbH & Co KG	Error LED of the Safety module shines red

ERRVAL(1090)	The measured value of the FPGA reference clock (REFCLK) is too small. This is a permanent error, which cannot be canceled. Possible cause(s): • hardware error • CPU • FPGA	number of measure edges	minimum number of flanks to measure	Contact SIGMATEK GmbH & Co KG	Error LED of the Safety module shines red
ERRVAL(1091)	The measured value of the FPGA reference clock (REFCLK) is too large. This is a permanent error, which cannot be canceled. Possible cause(s): • hardware error • CPU • FPGA	number of measure edges	maximum number of flanks to measure	Contact SIGMATEK GmbH & Co KG	Error LED of the Safety module shines red
ERRVAL(1092)	While waiting for the SSDO response, the time was exceeded. Possible cause(s): • runtime over the bus • processing time in the target module	always 0	always 0	Decrease runtimes.	Error LED of the Safety module shines red
ERRVAL(1093)	The other controller has detected an error. Possible cause(s): • cause according to the error code of the other controller	error code of the other controller	always 0	Check error code of the other controller.	Error LED of the Safety module shines red

ERRVAL(1094)	The configuration status of the other controller does not match. Possible cause(s): • module was turned off during configuration	configuration of the controller	configuration of the other controller	Configure module again.	Error LED of the Safety module shines red
ERRVAL(1095)	A constant in the application memory was changed and no longer matches the values stored in the flash. Possible cause(s): • hardware error (defective flash, defective RAM) • software error	memory cell index of the incorrect constant in the application memory	index of the constant in the flash	Contact SIGMATEK GmbH & Co KG	Error LED of the Safety module shines red
ERRVAL(1096)-ERRVAL(1097)	Not used				
ERRVAL(1098)	The reaction to the internal test could not be determined. Possible cause(s): • software error	bit mask for the digital inputs	0 error at a local input 1 error at a Safety interface input	Contact SIGMATEK GmbH & Co KG	Error LED of the Safety module shines red
ERRVAL(1099)	An error was detected during the input test (internal test). Possible cause(s): • hardware error	status of the digital inputs	bit mask for the digital inputs	Contact SIGMATEK GmbH & Co KG	Error LED of the Safety module shines red
ERRVAL(1100)	An internal test is active during the external test. Possible cause(s): • software error	always 0	always 0	Contact SIGMATEK GmbH & Co KG	Error LED of the Safety module shines red
ERRVAL(1101)	The reaction to the external test could not be determined. Possible cause(s): • software error	bit mask for the digital inputs	0 error at a local input 1 error at a Safety interface input	Contact SIGMATEK GmbH & Co KG	Error LED of the Safety module shines red

ERRVAL(1102)	External test: The pulse signal is not detected by a connected input. Possible cause(s): • cross-circuit	always 0	always 0	Compare wiring of the cross circuit with the application.	Error LED of the Safety module blinks
ERRVAL(1103)	External test: The pulse signal of the other output is detected by a connected input. Possible cause(s): • cross-circuit	always 0	always 0	Compare wiring of the cross circuit with the application.	Error LED of the Safety module blinks
ERRVAL(1104)	The Lo-Resolution timer is not working correctly (measured values are too small). Possible cause(s): • hardware error	value measured in the Lo-Resolution timer	lower limit for the measurement	Contact SIGMATEK GmbH & Co KG	Error LED of the Safety module shines red
ERRVAL(1105)	The Lo-Resolution timer is not working correctly (measured values are too large). Possible cause(s): • hardware error	value measured in the Lo-Resolution timer	upper limit for the measurement	Contact SIGMATEK GmbH & Co KG	Error LED of the Safety module shines red
ERRVAL(1106)	The millisecond timer is not working correctly (measured values are too small). Possible cause(s): • hardware error • software error	value measured in the millisecond timer	lower limit for the measurement	Contact SIGMATEK GmbH & Co KG	Error LED of the Safety module shines red
ERRVAL(1107)	The millisecond timer is not working correctly (measured values are too large). Possible cause(s): • hardware error • software error	value measured in the millisecond timer	upper limit for the measurement	Contact SIGMATEK GmbH & Co KG	Error LED of the Safety module shines red

ERRVAL(1108)	Not used				
ERRVAL(1109)	The format of the info sector in the flash is incorrect. Possible cause(s): • module was never initialized (with the Clear-All command) • hardware error in the flash	always 0	always 0	Configure module. If the error still occurs: Contact SIGMATEK GmbH & Co KG	Error LED of the Safety module shines red
ERVAL(1110)-ERRVAL(1114)	The configuration data format in the flash is incorrect. Possible cause(s): • module was configured incorrectly • hardware error in the flash	detailed information on the cause	detailed information on the cause	Configure module. If the error still occurs: Contact SIGMATEK GmbH & Co KG	Error LED of the Safety module shines red
ERRVAL(1115)	The configuration data format in the flash is incorrect. Possible cause(s): • module was configured incorrectly • in the configuration data a not supported optional module has been found • hardware error in the flash	1 not supported optional module 1-39 error information	type of the module detail information	Configure module, check whether a not supported module is plugged in and in case use a SCP with up-to-date firmware; set correct parameter version in the SSI module. If the error still occurs: Contact SIGMATEK GmbH & Co KG	Error LED of the Safety module shines red

ERRVAL(1116)-ERRVAL(1128)	The configuration data format in the flash is incorrect. Possible cause(s): • module was configured incorrectly • hardware error in the flash	detailed information on the cause	detailed information on the cause	Configure module. If the error still occurs: Contact SIGMATEK GmbH & Co KG	Error LED of the Safety module shines red
ERRVAL(1129)	An error has occurred during communication with the FPGA. Possible cause(s): • hardware error (FPGA)	value that provides detailed information on the error 0 SPI access 0 failed 1 SPI access 1 failed 2 DMA no longer works 3 invalid FPGA version 4 FPGA not ready	value that provides detailed information on the error	Contact SIGMATEK GmbH & Co KG	Error LED of the Safety module shines red
ERRVAL(1130)	A buffer was entered in a function call as a parameter. However, the buffer size is too large. Possible cause(s): • program error	actual buffer size	maximum buffer size	Contact SIGMATEK GmbH & Co KG	Error LED of the Safety module shines red
ERRVAL(1131)	The wrong frame type was used for the SSDO command Possible cause(s): • error in the Safety tool	always 0	always 0	Contact SIGMATEK GmbH & Co KG	Error LED of the Safety module shines red

ERRVAL(1132)	A Safety number for a remote module exists twice. Possible cause(s): • an error has occurred while determining the module safety number using the topology path	Reason-Code 0: < 1024: index of the module in the remote module table Reason-Code 0: = 1024: a safety number of a remote module is the same as the own safety number Reason-Code 0: = 1025: when requesting the own safety number, the own safety number was not received	doubled module Safety number	Restart the application. Check all Safety numbers on uniqueness.	Error LED of the Safety module shines red
ERRVAL(1133)	The micro controller is in the incorrect processor mode. Either the flags for the processor mode or for activating the interrupts in the program status register are set incorrectly or the wrong stack is used. Possible cause(s): • processor mode does not switch correctly (due to hard or software errors)	flags set in the program status register or stack pointer value.	set value for the flags in the program status register or the upper/lower limit of the required stack area	Contact SIGMATEK GmbH & Co KG	Error LED of the Safety module shines red
ERRVAL(1134)	The calculated output image in both controllers is different.	status of the local outputs in the first controller	status of the local outputs in the other controller	Contact SIGMATEK GmbH & Co KG	Error LED of the Safety module shines red

ERRVAL(1135)	The supply voltage of an expansion module is not OK. Possible cause(s): • external voltage supply not connected • hardware error	0 if the supply voltage of the CPU module is not OK 1 if during the watchdog test, an error is detected, that was triggered by a missing supply voltage	module position (0 = 1st expansion module)	Ensure that the external voltage supply for the pulse outputs in the Safety modules with digital inputs and the supply voltage for the outputs in Safety modules are correct. After applying the correct voltage, the error can be canceled with "Quit Error" or by restarting.	Error LED of the Safety module shines red DCOK LED does not shine
ERRVAL(1136)	The Boolean display of an output has an invalid value. Possible cause(s): • software error (memory was overwritten in an disallowed location) • hardware error (defective RAM)	0x00000000 means that the error was detected when decoding a cell in the application memory 0xFFFFFFFF means that the error was detected while coding the SAFEBOOL value for the SPDO frame	invalid value	Contact SIGMATEK GmbH & Co KG	Error LED of the Safety module shines red
ERRVAL(1137)	The values from the back-read outputs do not match the set values of the outputs. Possible cause(s): • hardware error (e.g. output transistor defective) • external error (i.e. short circuit, voltage supply for the outputs are missing) • software error	set values (bit 0 = 1st output)	actual values (bit 0 = 1st output)	Check voltage supply. If the error still occurs: Contact SIGMATEK GmbH & Co KG	Error LED of the Safety module shines red

ERRVAL(1138)	An error has occurred during the Watchdog test. Possible cause(s): • hardware error	bit mask for identifying the test step in which the error was detected	actual test step	Contact SIGMATEK GmbH & Co KG	Error LED of the Safety module shines red
ERRVAL(1139)-ERRVAL(1141)	In the configuration, invalid parameters are assigned in the COPY command. Possible cause(s): • defective configuration loaded • defective flash	index of the source or destination	maximum number of available cells or upper/lower index limit	Contact SIGMATEK GmbH & Co KG	Error LED of the Safety module shines red
ERRVAL(1142)	After activating the upper output semiconductor (HSS), at least one output is set to 1 although none of the lower output semiconductors (FET) were activated. This is a permanent error, which cannot be canceled. Possible cause(s): • Output semiconductor (FET) defective	set value (bit 0 = 1st output) always 0	actual value, affected outputs (bit 0 = 1st output)	Contact SIGMATEK GmbH & Co KG	Error LED of the Safety module shines red
ERRVAL(1143)	After deactivating the HSS output semiconductor, none of the previously set outputs are set to 0. Possible cause(s): • Output semiconductor (HSS) defective • unacceptably high capacitive load	value of the outputs after shutting down the HSS (bit 0 = 1st output)	previously set outputs (bit 0 = 1st output)	Contact SIGMATEK GmbH & Co KG	Error LED of the Safety module blinks

ERRVAL(1144)	After deactivating the FET output semiconductor, the corresponding output is not set to 0. Possible cause(s): • Output semiconductor (FET) defective • unacceptably high capacitive load	affected output (bit 0 = 1st output)	always 0	Contact SIGMATEK GmbH & Co KG	Error LED of the Safety module blinks
ERRVAL(1145)	After deactivating the FET semiconductor, the value of an output not connected to this FET has changed. Possible cause(s): • internal cross-circuit in the output circuit	status of the outputs (bit 0 = 1st output)	desired status of the outputs (bit 0 = 1st output)	Contact SIGMATEK GmbH & Co KG	Error LED of the Safety module blinks
ERRVAL(1146)	The cyclic process is not completed within the allowed time. Possible cause(s): • application errors	Caller ID with which the runtime trigger last occurred.	code address, from which the process is resumed, after the interrupt function has ended	Increase cycle time of Safety CPU.	Error LED of the Safety module shines red

ERRVAL(1147)	The logical program monitor has determined that a program component was not called for an unacceptably long time. Possible cause(s): • software error	SCP010: < 100 program component index >=100 program component identification, where the error was detected 100-109 SCP011 & SCP111: <1000 program component index >=1000 program component identification, where the error was detected 1000-1009	SCP010: Reason-Code 0 < 100 required time for the program component SCP011 & SCP111: Reason-Code 0: < 1000: required time for the program component	Contact SIGMATEK GmbH & Co KG	Error LED of the Safety module shines red
ERRVAL(1148)	Back-reading of the HS transistors is not OK. Possible cause(s): • hardware error • no supply voltage	position of the expansion module (0 = 1st module)	value of the HS signal	Check voltage supply. If the error still occurs: Contact SIGMATEK GmbH & Co KG	Error LED of the Safety module shines red
ERRVAL(1149)	An SSI expansion module has detected an incorrectly coded value at an input. Possible cause(s): • hardware error	module position and incorrectly coded value	always 0	Contact SIGMATEK GmbH & Co KG	Error LED of the Safety module shines red
ERRVAL(1150)	The input value has not been updated for an unacceptably long time. Possible cause(s): • error in the input hardware • continuously changing input signal	affected input (bit 0 = 1st input)	maximum age	Contact SIGMATEK GmbH & Co KG	Error LED of the Safety module shines red

ERRVAL(1151)	The reserved stack area was overwritten (lower limit). Possible cause(s): • software error • stack-reserve dimensioned too small	ID of the affected stack area	always 0	Contact SIGMATEK GmbH & Co KG	Error LED of the Safety module shines red
ERRVAL(1152)	The reserved stack area was overwritten (upper limit). Possible cause(s): • software error • stack-reserve dimensioned too small	ID of the affected stack area	always 0	Contact SIGMATEK GmbH & Co KG	Error LED of the Safety module shines red
ERRVAL(1153)	The calculated output image in both controllers is different. Possible cause(s): • software error	CRC of the send SPDO frame and the application memory of the first controller	CRC of the send SPDO frame and the application memory of the other controller	Contact SIGMATEK GmbH & Co KG	Error LED of the Safety module shines red
ERRVAL(1154)	The information on the stored safety number of the remote module is inconsistent. Possible cause(s): • program error	index of searched module	number of elements in the remote module table	Contact SIGMATEK GmbH & Co KG	Error LED of the Safety module shines red
ERRVAL(1155)	The CPU test has detected an error. Possible cause(s): • CPU error	always 0	always 0	Contact SIGMATEK GmbH & Co KG	Error LED of the Safety module shines red

ERRVAL(1156)	No encoder value was read by the encoder (SSI encoder, incremental encoder), as the CPLD did not start the reading procedure. Possible cause(s): • standard application has not been started • hardware class for the SSI module is not placed • hardware class for the SNC is not placed	always 0	always 0	Restart application Check, whether the hardware structure matches with the application; change application accordingly.	
ERRVAL(1157)	The maximum jitter between the reading procedures of the encoder values have not been met. Possible cause(s): • invalid configuration by the hardware classes • hardware error	always 0	always 0	Check versions of FPGA and hardware classes	

ERRVAL(1158)	The CPLD for the encoder reports an error, so that no encoder value could be read. Possible cause(s): • settings for the encoder are not correct • encoder is not connected • encoder is not supported • encoder is defective	always 0	always 0	Check, whether in the standard application the parameters for the encoders are correct according to their data sheets and have been taken over in the safe application Check the cable connection to the encoders Check, whether the used encoder is supported according to the data sheet of the SSI 021 Check, whether encoder is defective	
ERRVAL(1159)	Data read from the CPLD are valid. Possible cause(s): • settings for the encoder are not correct • the settings for the encoder have been changed during runtime • encoder is defective	always 0	always 0	Check, whether in the standard application the parameters for the encoders are correct according to their data sheets and have been taken over in the safe application Check the cable connection to the encoders Check, whether encoder is defective	

ERRVAL(1160)	The supply voltage of the encoder is not OK. Possible cause(s): • supply voltage for the encoders does not exist • hardware error	always 0	always 0	Check the wiring of the supply voltage for the encoder	Safe DATA OK LED of the according encoder channel does not shine
ERRVAL(1161)	There is an error in the configuration of the module. Possible cause(s): • encoder connected, although according to Safety application it is not used	always 0	always 0	Check, whether the parameters for the connected encoders have been set correctly in the Safety application	Safe DATA OK LED of the according encoder channel does not shine
ERRVAL(1162)	A signal error was detected by the first RS422 driver while testing the signals of the incremental encoder. Possible cause(s): • cross circuit of the signal lines • cable break • short circuit	always 0	always 0	Check encoder wiring and encoder	Safe DATA OK LED of the according encoder channel does not shine Encoder status LED of the according encoder blinks

ERRVAL(1163)	A signal error was detected by the second RS422 driver while testing the signals of the incremental encoder. Possible cause(s): • cross circuit of the signal lines • cable break • short circuit	always 0	always 0	Check encoder wiring and encoder	Safe DATA OK LED of the according encoder channel does not shine Encoder status LED of the according encoder blinks
ERRVAL(1164)	A signal error was detected while testing the signals of the Z track of the incremental encoder. Possible cause(s): • cross circuit of the signal lines • cable break • short circuit	always 0	always 0	Check encoder wiring and encoder	Safe DATA OK LED of the according encoder channel does not shine Encoder status LED of the according encoder blinks

ERRVAL(1165)	While testing the signals of the Z track of the incremental encoder it was detected that the signal lines Z+ and Z- are exchanged. Possible cause(s): • exchange of the signal lines Z+ and Z-	always 0	always 0	Check encoder wiring	Safe DATA OK LED of the according encoder channel does not shine Encoder status LED of the according encoder blinks
ERRVAL(1166)	No Z impulse was detected although a Z impulse should have occurred due to the movement. Possible cause(s): • set encoder resolution does not match with real encoder resolution • encoder defective	always 0	always 0	Check the resolution of the encoder in the parameters of the SNC 021 in the SAFETYDesigner Check encoder wiring and encoder	Safe DATA OK LED of the according encoder channel does not shine
ERRVAL(1167)	Too few edges have been counted on the A and B track between two Z impulses. Possible cause(s): • set encoder resolution does not match with real encoder resolution • encoder defective	always 0	always 0	Check the resolution of the encoder in the parameters of the SNC 021 in the SAFETYDesigner Check encoder wiring and encoder	Safe DATA OK LED of the according encoder channel does not shine
ERRVAL(1168)-ERRVAL(1171)	An input or output of an expansion module is in error status. Possible cause(s): • error in the expansion module	always 0	always 0	Contact SIGMATEK GmbH & Co KG	Error LED of the Safety module shines red

ERRVAL(1172)	Not used				
ERRVAL(1173)	The values of the read outputs do not match with the set values. The set value is 1, the actual value is 0. Possible cause(s): • hardware error (e.g. output transistor defective) • external error (e.g. short circuit, supply voltage of the outputs missing) • software error	always 0	always 0	Check voltage supply If the error still occurs: Contact SIGMATEK GmbH & Co KG	LED of the safe output blinks
ERRVAL(1174)	The values of the read outputs do not match with the set values. The set value is 0, the actual value is 1. Possible cause(s): • hardware error (e.g. output transistor defective) • external error (e.g. short circuit, supply voltage of the outputs missing) • Software error	always 0	always 0	Check voltage supply If the error still occurs: Contact SIGMATEK GmbH & Co KG	LED of the safe output blinks

ERRVAL(1175)	The values of the read outputs do not match with the set values. Possible cause(s): • Hardware error (e.g. output transistor defective) • external error (e.g. short circuit, supply voltage of the outputs missing) • Software error	always 0	always 0	Check voltage supply If the error still occurs: Contact SIGMATEK GmbH & Co KG	LED of the safe output blinks
ERRVAL(1176)	The firmware update for a local expansion module failed. Possible cause(s): Wrong update file • Flashing of the image in the expansion module not possible due to a hardware defect • Error in the extension module • Software error	always 0	always 0	Contact SIGMATEK GmbH & Co KG	Error LED of the Safety module shines red
ERRVAL(1177)	Not used				
ERRVAL(1180)	No safety number has been stored for the slave yet. Possible cause(s): • Slave not found • Routing Error • Software error	always 0	always 0	Restarting the Safety CPU	Error LED of the Safety module shines red

ERRVAL(1181)	The safe measuring range of the input has been undercut. Possible cause(s): • Hardware error • Wiring error	always 0	always 0	Check wiring If the error still occurs: Contact SIGMATEK GmbH & Co KG	Error LED of the Safety module shines red
ERRVAL(1182)	The safe measuring range of the input has been exceeded. Possible cause(s): • Hardware error • Wiring error	always 0	always 0	Check wiring If the error still occurs: Contact SIGMATEK GmbH & Co KG	Error LED of the Safety module shines red
ERRVAL(1183)	The tolerance of the end value between the controllers would be exceeded. Possible cause(s): • Hardware error	always 0	always 0	Contact SIGMATEK GmbH & Co KG	Error LED of the Safety module shines red
ERRVAL(1184)-ERRVAL(1188)	Not used				
ERRVAL(1189)	The safe measuring range of the input has been undercut. Error is automatically acknowledged when the measured value is valid again. Possible cause(s): • Hardware error • Wiring error	always 0	always 0	Check wiring If the error still occurs: Contact SIGMATEK GmbH & Co KG	Error LED of the Safety module shines red
ERRVAL(1190)	The safe measuring range of the input has been exceeded. Error is automatically acknowledged when the measured value is valid again. Possible cause(s): • Hardware error • Wiring error	always 0	always 0	Check wiring If the error still occurs: Contact SIGMATEK GmbH & Co KG	Error LED of the Safety module shines red

ERRVAL(1191)-ERRVAL(1196)	Not used				
ERRVAL(1197)	There is an incorrect CRC2 in the configuration. The status of the module cannot be changed or configured. Possible cause(s): • hardware error • incorrect configuration	always 0	always 0	Check configuration on validity. If the error still occurs: Contact SIGMATEK GmbH & Co KG	Error LED of the Safety module shines red
ERRVAL(1198)	The internal cycle time counter does not work correctly. Possible cause(s): • software error	last time difference	maximum time difference	Contact SIGMATEK GmbH & Co KG	Error LED of the Safety module shines red

ERRVAL(1199)	The remote safety input value has exceeded the maximum age. Possible cause(s): • bus data exchange error • error in the hardware of the remote module • software error in the remote module	always 0	always 0	Check whether the standard communication for each required Safety module is intact. In addition, ensure that none of the non-required Safety modules is in the error mode. It can also be that the maximum transmission time was configured too low. The above points must be checked. If the error was corrected, it can be canceled with Quit error or by restarting the system, errors are eliminated.	Error LED of the Safety module blinks
ERRVAL(1200)	Not used				
ERRVAL(1201)-ERRVAL(1205)	An unexpected exception has occurred. Possible cause(s): • software error	address of the interrupted code	with an exception outside of the FSB call: always 0 with an exception during the FSB call: - FSB ID in the lower 2 bytes - object index of the upper 2 bytes	Contact SIGMATEK GmbH & Co KG	Error LED of the Safety module shines red

ERRVAL(1206)	The system times for both controllers have to large a deviation. This is a permanent error, which cannot be canceled. Possible cause(s): • hardware error	determined drift between both controller system times	maximum allowed drift	Contact SIGMATEK GmbH & Co KG	Error LED of the Safety module shines red
ERRVAL(1207)	The module type and module variant in the Firmware does not match the values stored in the unchangeable module parameters. Possible cause(s): • incorrect firmware	module type and variant of the firmware	module type and variant of the boot loader	Contact SIGMATEK GmbH & Co KG	Error LED in the corresponding Safety module lights red
ERRVAL(1208)-ERRVAL(1209)	The non-changeable module parameters are different in both controllers. Possible cause(s): • hardware error • flash programmed incorrectly	module parameters of the first controller	module parameters of the other controller	Contact SIGMATEK GmbH & Co KG	Error LED of the Safety module shines red
ERRVAL(1210)	The firmware version is different in both controllers. Possible cause(s): • incorrect firmware	firmware version of the first controller	firmware version of the other controller	Contact SIGMATEK GmbH & Co KG	Error LED of the Safety module shines red
ERRVAL(1211)-ERRVAL(1212)	An error was detected in a non-editable flash area during the ROM test. This is a permanent error, which cannot be canceled. Possible cause(s): • defective flash	detailed information on the cause of the error	always 0	Contact SIGMATEK GmbH & Co KG	Error LED of the Safety module shines red

ERRVAL(1213)-ERRVAL(1217)	An error was detected in an editable flash area during the ROM test Possible cause(s): • defective flash • module was deactivated while programming the flash	detailed information on the cause of the error	always 0	Contact SIGMATEK GmbH & Co KG	Error LED of the Safety module shines red
ERRVAL(1218)	After activating the lower output semiconductor (FET), at least one output is set to 1 although none of the upper output semiconductors (HSS) were activated. Possible cause(s): • Output semiconductor (HSS) defective	set value (bit 0 = 1st output) always 0	actual value, affected outputs (bit 0 = 1st output)	Contact SIGMATEK GmbH & Co KG	Error LED of the Safety module shines red
ERRVAL(1219)	The content of an SSDO answer in both controllers is different Possible cause(s): • software error	always 0	always 0	Contact SIGMATEK GmbH & Co KG	Error LED of the Safety module shines red
ERRVAL(1220)	An attempt was made to write and invalid length of data to the flash. Possible cause(s): • program error	always 0	always 0	Contact SIGMATEK GmbH & Co KG	Error LED of the Safety module shines red
ERRVAL(1221)	An attempt was made to read a buffer, whereby the buffer contains less than the required amount data. Possible cause(s): • software error • defective Safety tool (SSDO command)	number of bytes that should be read from the buffer	buffer size	Contact SIGMATEK GmbH & Co KG	Error LED of the Safety module shines red

ERRVAL(1222)	The test mode or maximum idle time has elapsed.	0 the test mode time has elapsed	always 0	After finished test mode, again download the configuration and restart.	Error LED of the Safety module shines red
		1 time for the maximum Idle time has elapsed 2 time for the max. Check Config time has elapsed	always 0	After finished Idle time resp. Check Config time cancel the error and restart.	
ERRVAL(1223)	The processing time for the internal test is incorrect. An attempt was made start a test while the previous test is still running Possible cause(s): • software error	bit mask of the inputs or number of the erroneous test step	more precise information about the cause of the error	Contact SIGMATEK GmbH & Co KG	Error LED of the Safety module shines red
ERRVAL(1224)	The processing time for the internal test is incorrect. An attempt was made start a test while the previous test is still running. Possible cause(s): • software error	bit mask of the inputs to be tested	bit mask of the previously tested inputs	Contact SIGMATEK GmbH & Co KG	Error LED of the Safety module shines red
ERRVAL(1225)	The configuration status cannot be set to configured, as the areas belonging to the CRCs are invalid. Possible cause(s): • a firmware updated was performed; • module was configured incorrectly • hardware error in the flash	always 0	always 0	Contact SIGMATEK GmbH & Co KG	Error LED of the Safety module shines red

ERRVAL(1226)	The configuration status cannot be set to configured, as the CRC given by the caller does not match the actual one. The module does not switch to the error status. Error displayed in the console window of the SAFETYDesigner. Possible cause(s): • module was configured incorrectly • hardware error in the flash	always 0	always 0	The Safety module must be reconfigured. If the error still occurs: Contact SIGMATEK GmbH & Co KG	Error LED of the Safety module shines red
ERRVAL(1227)	The configuration data format in the flash is incorrect. Possible cause(s): • module was configured incorrectly • hardware error in the flash	actual configuration data	configuration status setting	Contact SIGMATEK GmbH & Co KG	Error LED of the Safety module shines red
ERRVAL(1228)	The configuration status cannot be set to configured, as the configuration is deleted. Possible cause(s): • module was configured incorrectly • hardware error in the flash	always 0	always 0	Contact SIGMATEK GmbH & Co KG	Error LED of the Safety module shines red

ERRVAL(1229)	The configuration is not in the status by which the Verified flag can be set. Possible cause(s): • the configuration has never been distributed • the configuration was written to the Safety CPU in the development mode	always 0	always 0	Do not start program in Developer mode. Restart program and thus trigger distribution.	Error LED of the Safety module shines red
ERRVAL(1230)	The SSDO command cannot be executed due to missing authorization. Possible cause(s): • SAFETYDesigner error	always 0	always 0	Again go online with the SAFETYDesigner and again execute commands.	Error LED of the Safety module shines red
ERRVAL(1231)	When going online, no sessions could be opened. Possible cause(s): • another SAFETYDesigner is already online	always 0	always 0	Check if several SAFETYDesigners are online, only one SAFETYDesigner may access.	Error LED of the Safety module shines red
ERRVAL(1232)	The maximum number of remote modules has been exceeded.	number of remote modules	maximum number of remote modules allowed	Check and accordingly change the number of remote modules.	Error LED of the Safety module shines red
ERRVAL(1233)	The module type coded in the CFG pins does not match the Firmware or an unsupported IO expansion card was inserted. Possible cause(s): • incorrect firmware	Bit 31 = 0: CFG-Pins according to the hardware Bit 31 = 1: ID of the unsupported expansion card Bit 30 = 1: Vendor ID of the unsupported expansion card Bit 29 = 1: ID of the unsupported Safety Interface module	If Reason Code 0 Bit31 = 0: CFG pins according to firmware If Reason Code 0 Bit31 = 1: always 0 If Reason Code 0 Bit30 = 1: Device ID of the not supported expansion card	Contact SIGMATEK GmbH & Co KG	Error LED of the Safety module shines red

ERRVAL(1234)	The SSDO command cannot be executed in this runtime status. Possible cause(s): • error in the Safety tool	always 0	always 0	Again go online with the SAFE-TYDesigner and again execute commands.	Error LED of the Safety module shines red
ERRVAL(1235)	The parameters in the header of the new Firmware do not match this module. Possible cause(s): • incorrect firmware	parameters in the firmware	parameters in the boot code	Contact SIGMATEK GmbH & Co KG	Error LED of the Safety module shines red
ERRVAL(1236)	An error has occurred while accessing the SD card. Possible cause(s): • SD card has been removed • defective or incompatible SD card	identification of the error cause	last error	Check whether the SD card was removed. If the SD card was not removed, it must be exchanged. The error can be reset with the removal of the SD card and the Quit Error command. If the error still occurs: Contact SIGMATEK GmbH & Co KG	Error LED of the Safety module shines red

ERRVAL(1237)	Read/write error in the interpreter code of the configuration. During the configuration test, one of the following errors were detected: a) An attempt was made to write to a cell, which was already written to from another source (e.g. if 2 COPY commands with the same destination exist or if a COPY command provides a non-writable cell as the destination). b) An attempt was made to read a non-readable cell. A cell is not readable when there is no corresponding source from which it was written (not initialized) or when it cannot be used as the source of a COPY command (e.g. the header of the object memory). Possible cause(s): • a defective configuration was loaded, Flash defective • defective flash	index of the incorrect cell	0 writing error 1 reading error 2 for FSoE: a remote input is written to by more than one source	Contact SIGMATEK GmbH & Co KG	Error LED of the Safety module shines red

ERRVAL(1238)	The POST (Power On Self-Test) has not been completely processed Possible cause(s): • software error	Bit mask with the outstanding POST test steps	always 0	An error was detected during the start-up test. The error type is displayed in the SAFETYDesigner. The error can then be corrected. If the error still occurs: Contact SIGMATEK GmbH & Co KG	Error LED of the Safety module shines red
ERRVAL(1239)	The sector buffer on the SD card to which should be written is different in both controllers Possible cause(s): • software error	number of the sector buffer to be written	always 0	Contact SIGMATEK GmbH & Co KG	Error LED of the Safety module shines red
ERRVAL(1240)	The force mode was incorrectly ended. Possible cause(s): • A session or login time-out has occurred due to an interruption in online communication with the SAFETYDesigner, • change the login level (e.g. logout) • close the session in the SAFETYDesigner	always 0	always 0	In case of an interrupt of the communication between SAFETYDesigner and the module, cancel the error.	Error LED of the Safety module shines red

ERRVAL(1241)	The password format on the SD card is incorrect. Possible cause(s): • SD card defective • contents were changed retroactively	always 0	always 0	Try to reload the SD card. If an error still occurs, exchange the SD card. If the error still occurs: Contact SIGMATEK GmbH & Co KG	Error LED of the Safety module shines red
ERRVAL(1242)	Internal error while processing the STDO Possible cause(s): • software error	length of the STDO that should be written	maximum length of a STDO	Contact SIGMATEK GmbH & Co KG	Error LED of the Safety module shines red
ERRVAL(1243)	The information on a safety number for a remote module is required but not available or invalid. Possible cause(s): • software error	value of the valid module safety number (0 or 0xFFFFffff)	always 0	Contact SIGMATEK GmbH & Co KG	Error LED of the Safety module shines red
ERRVAL(1244)	In the interpreter code of the configuration, an FSB identification was entered for which no corresponding code exists. Possible cause(s): • error in the Safety tool	FSB ID	always 0	Contact SIGMATEK GmbH & Co KG	Error LED of the Safety module shines red

ERRVAL(1245)	A value entered in the configuration data is too large. Possible cause(s): • value input in the SAFETYDesigner too large	indicates which parameter is too large 0 test time in the temporary operational status 1 cycle time for the runtime monitor 2 maximum age of the remote input 3 filter time or a local input 4 watchdog time of a Safety Interface input 5 optional flag of a Safety Interface input 6 Cfg major version 7 unknown data after the container header 8 no 0 placed at the end of the function block area 9 invalid length for the FSoE slave parameters 10 invalid value in the FSoE configuration 11 invalid FSoE connection ID 12 invalid FSoE slave address 13 saved FSoE addresses in the controllers are different or needed number of addresses is incorrect	limit	Set the value in the configuration correctly (enter smaller value).	Error LED of the Safety module shines red

		14 slave address, used for answering the C_GET_SLAVEADDR command, could not be determined clearly			
ERRVAL(1246)	Errors in the function blocks Possible cause(s): • software error			Contact SIGMATEK GmbH & Co KG	
ERRVAL(1247)	Errors in the function blocks, overflow in internal calculations Possible cause(s): • software error • incorrect parameter • Safedint values out of allowed range			Check the parameters and set value range. If the error still occurs: Contact SIGMATEK GmbH & Co KG	
ERRVAL(1248)	Errors in the function blocks, wrong Safedint values. Possible cause(s): • software error			Contact SIGMATEK GmbH & Co KG	
ERRVAL(1249)	Errors in the function blocks, wrong internal status. Possible cause(s): • software error			Contact SIGMATEK GmbH & Co KG	
ERRVAL(1250)	Errors in the function blocks, wrong parameters. Possible cause(s): • software error			Contact SIGMATEK GmbH & Co KG	
ERRVAL(1251)	Errors in the function blocks, wrong Safebool values. Possible cause(s): • software error			Contact SIGMATEK GmbH & Co KG	

ERRVAL(1252)	Errors in the function blocks, wrong function block ID. Possible cause(s): • software error			Contact SIGMATEK GmbH & Co KG	
ERRVAL(1253)	Errors in the function blocks, wrong end ID. Possible cause(s): • software error			Contact SIGMATEK GmbH & Co KG	
ERRVAL(1254)	Errors in the function blocks, wrong start ID. Possible cause(s): • software error			Contact SIGMATEK GmbH & Co KG	
ERRVAL(1255)	Not used				
ERRVAL(10000)	The external supply voltage is not OK. Possible cause(s): • external supply voltage not connected • hardware error	Byte 0 = 0: During booting it was detected that the supply voltage is not OK Byte 1: Position of the module behind the Safety CPU	always 0	Check supply voltage If the error still occurs: Contact SIGMATEK GmbH & Co KG	Error LED of Safety CPU shines red
ERRVAL(10001)	The maximum allowed current of an encoder was exceeded (see product data sheet of the SNC 021 module). Possible cause(s): • wiring error • cross circuit • short circuit • using a wrong encoder	Byte 0: 0: maximum current of the first encoder exceeded 1: maximum current of the second encoder exceeded Byte 1: Position of the module behind the Safety CPU	Byte 0 and 1: Maximum allowed current in 10 µA Byte 2 and 3: Measured current of the encoder in 10 µA	Check current of the encoder Check encoder wiring and encoder If the error still occurs: Contact SIGMATEK GmbH & Co KG	Error LED of Safety CPU shines red

ERRVAL(10002)	The current measured for an encoder is below the allowed limit. Possible cause(s): • wiring error • cable break • encoder defective • hardware error	Byte 0: 0: limit for encoder 1 is too low 1: limit for encoder 2 is too low Byte 1: Position of the module behind the Safety CPU	Byte 0 and 1: Lower limit for the allowed current in 10 µA Byte 2 and 3: Measured current of the encoder in 10 µA	Check encoder wiring and encoder If the error still occurs: Contact SIGMATEK GmbH & Co KG	Error LED of Safety CPU shines red
ERRVAL(10003)	The current measured for an encoder is above the allowed limit. Possible cause(s): • wiring error • cross circuit • short circuit • encoder defective • hardware error	Byte 0: 0: limit for encoder 1 is too high 1: limit for encoder 2 is too high Byte 1: Position of the module behind the Safety CPU	Byte 0 and 1: Upper limit for the allowed current in 10 µA Byte 2 and 3: Measured current of the encoder in 10 µA	Check encoder wiring and encoder If the error still occurs: Contact SIGMATEK GmbH & Co KG	Error LED of Safety CPU shines red
ERRVAL(10004)	The voltage offset measured for an encoder for the current monitoring is below the allowed limit with switched off supply voltage. Possible cause(s): • hardware error	Byte 0: 0: limit for encoder 1 is too low 1: limit for encoder 2 is too low Byte 1: Position of the module behind the Safety CPU	Byte 0 and 1: Lower limit for the allowed voltage offset in mV Byte 2 and 3: Measured voltage offset of the encoder in mV	Exchange SNC module	Error LED of Safety CPU shines red
ERRVAL(10005)	The voltage offset measured for an encoder for the current monitoring is above the allowed limit with switched off supply voltage. Possible cause(s): • hardware error	Byte 0: 0: limit for encoder 1 is too high 1: limit for encoder 2 is too high Byte 1: Position of the module behind the Safety CPU	Byte 0 and 1: Upper limit for the allowed voltage offset in mV Byte 2 and 3: Measured voltage offset of the encoder in mV	Exchange SNC module	Error LED of Safety CPU shines red

ERRVAL(10006)	The supply voltage measured for an encoder is below the allowed limit. Possible cause(s): • wiring error • cable break • cross circuit • hardware error	Byte 0: 0: limit for encoder 1 is too low 1: limit for encoder 2 is too low Byte 1: Position of the module behind the Safety CPU	Byte 0 and 1: Lower limit for the allowed voltage in mV Byte 2 and 3: Measured voltage of the encoder in mV	Check wiring of the external voltage supply and the encoders If the error still occurs: Contact SIGMATEK GmbH & Co KG	Error LED of Safety CPU shines red
ERRVAL(10007)	The supply voltage measured for an encoder is above the allowed limit Possible cause(s): • wiring error • hardware error	Byte 0: 0: limit for encoder 1 is too high 1: limit for encoder 2 is too high Byte 1: Position of the module behind the Safety CPU	Byte 0 and 1: Upper limit for the allowed voltage in mV Byte 2 and 3: Measured voltage of the encoder in mV	Check wiring of the external voltage supply and the encoders If the error still occurs: Contact SIGMATEK GmbH & Co KG	Error LED of Safety CPU shines red
ERRVAL(10008)	The parameters for the set current are invalid. Possible cause(s): • software error • Safety CPU not compatible (see product data sheet of the SNC 021 module)	Byte 0: Error information Byte 1: Position of the module behind the Safety CPU	always 0	Check Safety CPU If the error still occurs: Contact SIGMATEK GmbH & Co KG	Error LED of Safety CPU shines red
ERRVAL(10009)	An error was detected while testing the checksum over the constant elements for the current monitoring in the RAM. Possible cause(s): • software error • RAM defective	Byte 0: Error information Byte 1: Position of the module behind the Safety CPU	always 0	Exchange SNC module	Error LED of Safety CPU shines red

ERRVAL(10010)	The two RS422 drivers return different results for at least one signal of the encoders. Possible cause(s): • hardware error	Byte 0: information which signal is affected (Bit 0 = Signal A, Bit 1 = Signal B, Bit 2 = Signal Z) Byte 1: Position of the module behind the Safety CPU	always 0	Exchange SNC module	Error LED of Safety CPU shines red
ERRVAL(10011)	The maximum allowed input resp. counter frequency was exceeded (see product data sheet of the SNC 021 module) Possible cause(s): • encoder resolution too high • encoder used with a speed too high	Byte 0: 0: the maximum input resp. counter frequency for encoder 1 was exceeded 1: the maximum input resp. counter frequency for encoder 2 was exceeded Byte 1: Position of the module behind the Safety CPU	Byte 0 and 1: Maximum allowed counter frequency in increments/ms Byte 2 and 3: Measured counter frequency in increments/ms	Check the encoder for encoder resolution and speed If the error still occurs: Contact SIGMATEK GmbH & Co KG	Error LED of Safety CPU shines red
ERRVAL(10012)	The maximum allowed encoder resolution was exceeded (see product data sheet of the SNC 021 module). Possible cause(s): • encoder resolution too high	Byte 0: 0: the maximum encoder resolution for encoder 1 was exceeded 1: the maximum encoder resolution for encoder 2 was exceeded Byte 1: Position of the module behind the Safety CPU	Byte 0 and 3: Currently configured encoder resolution	Check the encoder for encoder resolution. If the error still occurs: Contact SIGMATEK GmbH & Co KG	Error LED of Safety CPU shines red
ERRVAL(10013)	The 3V3 supply voltage is below the permitted limit value. Possible cause(s): • hardware error	serves to identify the cause of the error Byte 0: Index of the ADC channel Byte 1: Position of the module	permitted limit	Contact SIGMATEK GmbH & Co KG	Error LED of the safety module shines red

ERRVAL(10014)	The 3V3 supply voltage is above the permitted limit value. Possible cause(s): • hardware error	serves to identify the cause of the error Byte 0: Index of the ADC channel Byte 1: Position of the module	permitted limit	Contact SIGMATEK GmbH & Co KG	Error LED of the safety module shines red
ERRVAL(10015)	The 5V0 supply voltage is below the allowed limit value. Possible cause(s): • hardware error	serves to identify the cause of the error Byte 0: Index of the ADC channel Byte 1: Position of the module	permitted limit	Contact SIGMATEK GmbH & Co KG	Error LED of the safety module shines red
ERRVAL(10016)	The 5V0 supply voltage is above the allowed limit value. Possible cause(s): • hardware error	serves to identify the cause of the error Byte 0: Index of the ADC channel Byte 1: Position of the module	permitted limit	Contact SIGMATEK GmbH & Co KG	Error LED of the safety module shines red
ERRVAL(10017)	The 5V1 supply voltage is below the permitted limit value. Possible cause(s): • hardware error	serves to identify the cause of the error Byte 0: Index of the ADC channel Byte 1: Position of the module	permitted limit	Contact SIGMATEK GmbH & Co KG	Error LED of the safety module shines red
ERRVAL(10018)	The 5V1 supply voltage is above the permitted limit value. Possible cause(s): • hardware error	serves to identify the cause of the error Byte 0: Index of the ADC channel Byte 1: Position of the module	permitted limit	Contact SIGMATEK GmbH & Co KG	Error LED of the safety module shines red

ERRVAL(10019)	The 15V0 supply voltage is below the permitted limit value. Possible cause(s): • hardware error	serves to identify the cause of the error Byte 0: Index of the ADC channel Byte 1: Position of the module	permitted limit	Contact SIGMATEK GmbH & Co KG	Error LED of the safety module shines red
ERRVAL(10020)	The 15V0 supply voltage is above the permitted limit value. Possible cause(s): • hardware error	serves to identify the cause of the error Byte 0: Index of the ADC channel Byte 1: Position of the module	permitted limit	Contact SIGMATEK GmbH & Co KG	Error LED of the safety module shines red
ERRVAL(10021)	The 24V1 supply voltage is below the permitted limit value. Possible cause(s): • hardware error	serves to identify the cause of the error Byte 0: Index of the ADC channel Byte 1: Position of the module	permitted limit	Contact SIGMATEK GmbH & Co KG	Error LED of the safety module shines red
ERRVAL(10022)	The 24V1 supply voltage is above the permitted limit value. Possible cause(s): • hardware error	serves to identify the cause of the error Byte 0: Index of the ADC channel Byte 1: Position of the module	permitted limit	Contact SIGMATEK GmbH & Co KG	Error LED of the safety module shines red
ERRVAL(10023)	The analog voltage monitoring has reported a value that is too low. Possible cause(s): • hardware error	serves to identify the cause of the error Byte 0: Index of the ADC channel Byte 1: Position of the module	permitted limit	Contact SIGMATEK GmbH & Co KG	Error LED of the safety module shines red

ERRVAL(10024)	The analog voltage monitoring has reported a value that is too high. Possible cause(s): • hardware error	serves to identify the cause of the error Byte 0: Index of the ADC channel Byte 1: Position of the module	permitted limit	Contact SIGMATEK GmbH & Co KG	Error LED of the safety module shines red
ERRVAL(10025)	Calibration data is incorrect or could not be read. Possible cause(s): • hardware error	serves to identify the cause of the error 0: read error 1: wrong length 2: wrong CRC 3: wrong version 4: wrong module ID 5: invalid controller ID	serves to identify the cause of the error	Contact SIGMATEK GmbH & Co KG	Error LED of the safety module shines red
ERRVAL(10026)	The 24 V sensor supply is below the permitted limit value. Possible cause(s): • hardware error	serves to identify the cause of the error Byte 0: 0 = error triggered by measurement, 1 = error triggered by DCOK pin Byte 1: position of the module	serves to identify the cause of the error Byte 0-1: allowed voltage limit Byte 2-3: measured value	Contact SIGMATEK GmbH & Co KG	Error LED of the safety module shines red
ERRVAL(10027)	The 24 V sensor supply is above the permitted limit value. Possible cause(s): hardware error	serves to identify the cause of the error Byte 1: position of the module	serves to identify the cause of the error Byte 0-1: allowed voltage limit Byte 2-3: measured value	Contact SIGMATEK GmbH & Co KG	Error LED of the safety module shines red
ERRVAL(10028)	The common mode voltage (CMVR) is above the permitted limit value. Possible cause(s): hardware error	serves to identify the cause of the error Byte 0: CMVR index (0-3) Byte 1: position of the module	serves to identify the cause of the error Byte 0-1: allowed voltage limit Byte 2-3: measured value	Contact SIGMATEK GmbH & Co KG	Error LED of the safety module shines red

ERRVAL(10029)	The common mode voltage (CMVR) is below the permitted limit value. Possible cause(s): hardware error	serves to identify the cause of the error Byte 0: CMVR index (0-3) Byte 1: position of the module	serves to identify the cause of the error Byte 0-1: allowed voltage limit Byte 2-3: measured value	Contact SIGMATEK GmbH & Co KG	Error LED of the safety module shines red
ERRVAL(10030)	The temperature or an ADC reference is above the permitted limit value. Possible cause(s): hardware error	serves to identify the cause of the error Byte 0: 0 = ADC reference, 1 = temperature Byte 1: position of the module	serves to identify the cause of the error Byte 0-1: allowed limit Byte 2-3: measured value	Contact SIGMATEK GmbH & Co KG	Error LED of the safety module shines red
ERRVAL(10031)	The temperature or an ADC reference is below the permitted limit value. Possible cause(s): hardware error	serves to identify the cause of the error Byte 0: 0 = ADC reference, 1 = temperature Byte 1: position of the module	serves to identify the cause of the error Byte 0-1: allowed limit Byte 2-3: measured value	Contact SIGMATEK GmbH & Co KG	Error LED of the safety module shines red
ERRVAL(10032)	The calibration or offset voltage is below the permissible limit.	serves to identify the cause of the error Byte 0: Bit 0-3 channel index Byte 1: position of the module Byte 2-3: extended error code	serves to identify the cause of the error Byte 0-1: allowed limit Byte 2-3: measured value	Contact SIGMATEK GmbH & Co KG	Error LED of the safety module shines red

ERRVAL(10033)	The calibration or offset voltage is above the permissible limit.	serves to identify the cause of the error Byte 0: Bit 0-3 channel index Byte 1: position of the module Byte 2-3: extended error code	serves to identify the cause of the error Byte 0-1: allowed limit Byte 2-3: measured value	Contact SIGMATEK GmbH & Co KG	Error LED of the safety module shines red
ERRVAL(10034)	Unexpected data was received from the ADC. Possible cause(s): hardware error	serves to identify the cause of the error Byte 1: position of the module	serves to identify the cause of the error Byte 0-3: received data	Contact SIGMATEK GmbH & Co KG	Error LED of the safety module shines red
ERRVAL(10035)	A brownout error has occurred. Possible cause(s): hardware error	serves to identify the cause of the error Byte 1: position of the module Byte 2-3: extended error code	always 0	Contact SIGMATEK GmbH & Co KG	Error LED of the safety module shines red
ERRVAL(10036)	An incompatibility between firm-ware, FPGA, and/or hardware has been detected. Possible cause(s): incompatibility within the module	serves to identify the cause of the error Byte 0: 0 = hardware version too low to be able to switch off Z pulse 1 = FPGA version too low to be able to switch off Z pulse 2 = hardware version too low according to FPGA Byte 1: position of the module Byte 2-3: extended error code	Bytes 0-3: used to identify the cause of the error	Replace the module or contact SIG-MATEK GmbH & Co KG.	Error LED of the safety module shines red

14 Appendix B: Troubleshooting MDD2000

Error Variable	Description	Reason Code 0	Reason Code 1	Reason Code 2	Solution
ERRVAL (0)	No error				
ERRVAL (256)	Synchronization between the safety cores failed during the startup phase. Possible cause(s): • hardware error • firmware error				Contact SIGMATEK GMBH & CO KG
ERRVAL (257)	Communication error between safety cores on the UART interface. Possible cause(s): • hardware error • firmware error				Contact SIGMATEK GMBH & CO KG
ERRVAL (258)	Communication error between safety cores on the SPI interface. Possible cause(s): • hardware error • firmware error				Contact SIGMATEK GMBH & CO KG
ERRVAL (259)	The safety cores detect different operating states for the current cycle. Possible cause(s): • firmware error	runtime state is transferred from SC1 to SC2	runtime state is transferred from SC2 to SC1	current runtime status	Contact SIGMATEK GMBH & CO KG
ERRVAL (260)	Stored data is missing or invalid. Possible cause(s): • firmware error				Resetting to factory settings with Factory Reset in SAFETYDesigner

ERRVAL (261)	Saving persistent data failed. Possible cause(s): • firmware error				Contact SIGMATEK GMBH & CO KG
ERRVAL (262) - ERRVAL (383)	Not used				
ERRVAL (384)	The controller configuration register (peripherals, MPU, etc.) has changed its value during runtime without explicitly accessing it. Possible cause(s): • hardware error • firmware error				Contact SIGMATEK GMBH & CO KG
ERRVAL (385)	The active safety configuration was changed at runtime (invalid CRC). Possible cause(s): • defective CPU • firmware error				Contact SIGMATEK GMBH & CO KG
ERRVAL (386)	The CPU board calibration file is invalid (invalid CRC). Possible cause(s): • defective flash memory • defective CPU • firmware error • missing or invalid calibration file				Importing a correct calibration file

ERRVAL (387)	The CPU Power calibration file is invalid (invalid CRC). Possible cause(s): • defective flash memory • defective CPU • firmware error • missing or invalid calibration file				Importing a correct calibration file
ERRVAL (388)	The STO PWM table is invalid (invalid CRC). Possible cause(s): • defective flash memory • defective CPU • firmware error • missing or invalid calibration file				Importing a correct table
ERRVAL (389)	The stored safety number or module ID is invalid. Possible cause(s): • defective CPU • firmware error • missing or invalid module info				Contact SIGMATEK GMBH & CO KG
ERRVAL (390)	Not supported firmware, version number for data transfer too low. Possible cause(s): • old firmware • firmware error	lowest allowed firmware number for data transfer	firmware number for data transfer on the module		Contact SIGMATEK GMBH & CO KG
ERRVAL (391) - ERRVAL (415)	Not used				

ERRVAL (416)	The maximum allowed runtime for the temporary operational mode has expired. Possible cause(s): • maximum time has expired	maximum time allowed in [s]			Acknowledge error and restart temporary operational mode or validate the drive
ERRVAL (417)	The maximum speed allowed for the temporary operational mode has been exceeded. Possible cause(s): • maximum speed is exceeded	index of the axis (start at 0)	speed causing the error (in currently set unit)	maximum allowed speed (in currently set unit)	Acknowledge error and restart temporary operational mode or validate the drive
ERRVAL (418)	The maximum allowed position window for the temporary operational mode was exceeded. Possible cause(s): • position window was exited				Acknowledge error and restart temporary operational mode or validate the drive
ERRVAL (419) - ERRVAL (447)	Not used				
ERRVAL (448)	The maximum temperature of the microcontroller has been exceeded. Possible cause(s): • temperature too high • defective hardware	temperature [°C]	maximum allowed temperature [°C]		Contact SIGMATEK GMBH & CO KG
ERRVAL (449)	An undervoltage was detected on the 24 V supply. Possible cause(s): • voltage too low • defective hardware	measured 24 V supply in [V]	minimum required 24 V supply in [V]		Check supply voltage

ERRVAL (450)	An undervoltage/overvoltage was detected on the 3V3 microcontroller supply. Possible cause(s): • defective hardware				Contact SIGMATEK GMBH & CO KG
ERRVAL (451) - ERRVAL (495)	Not used				
ERRVAL (496)	The FSoE connection is broken. Possible cause(s): • VARAN connection broken • LasalClass2 application stopped				Check the VARAN connections; start the LasalClass2 application
ERRVAL (497)	Incorrect values were received in the FSoE parameter status. Possible cause(s): • routing error				Check the LasalClass2 application
ERRVAL (498) - ERRVAL (511)	Not used				
ERRVAL (512)	Checking the safety configuration has failed. Possible cause(s): • wrong configuration				Check the safety application
ERRVAL (513)	The default safety configuration is invalid (invalid CRC or wrong length). Possible cause(s): • defective flash memory • defective CPU • firmware error • missing or invalid default safety configuration				Contact SIGMATEK GMBH & CO KG

ERRVAL (514)	The active safety configuration is invalid (invalid CRC or wrong length). Possible cause(s): • defective flash memory • defective CPU • firmware error				Contact SIGMATEK GMBH & CO KG
ERRVAL (515)	The saved safety configuration does not match the CRC that was saved at the end of the configuration distribution. Possible cause(s): • defective flash memory • defective CPU • firmware error	saved CRC of the safety configuration	CRC of the saved safety configuration		Contact SIGMATEK GMBH & CO KG
ERRVAL (516)	The imported safety configuration does not match the firmware version of the module. Possible cause(s): • wrong configuration download • firmware error				Contact SIGMATEK GMBH & CO KG
ERRVAL (517)	Access to the CRC of the safety configuration has failed (read or write). Possible cause(s): • firmware error				Contact SIGMATEK GMBH & CO KG

ERRVAL (518)	The safety configuration contains invalid parameters. Possible cause(s): • safety configuration and firmware version do not match	index of the unknown parameter	subindex of the unknown parameter		Contact SIGMATEK GMBH & CO KG
ERRVAL (519)	The safety configuration contains invalid parameters for a function. Possible cause(s): • safety configuration and firmware version do not match	index of axis (starting at 0)	index and subindex of the affected function	index and subindex of the affected parameter	Contact SIGMATEK GMBH & CO KG
ERRVAL (520)	The safety configuration contains invalid parameters. Possible cause(s): • firmware error • invalid safety configuration				Contact SIGMATEK GMBH & CO KG
ERRVAL (521)	There are different results when parsing the configuration in controller 1 and controller 2. Possible cause(s): • firmware error				Contact SIGMATEK GMBH & CO KG
ERRVAL (522) - ERRVAL (639)	Not used				
ERRVAL (640)	The plausibility check of the safety functions during initialization has failed. Possible cause(s): • firmware error • invalid safety configuration				Contact SIGMATEK GMBH & CO KG

ERRVAL (641)	The selected safety function is not supported by the firmware. Possible cause(s): • firmware version too low • invalid safety configuration	index of axis (starting at 0)	index of the unknown safety function		Contact SIGMATEK GMBH & CO KG
ERRVAL (642)	The maximum number of safety functions has been exceeded (max. 48 per axis). Possible cause(s): • invalid safety configuration with too many safety functions				Contact SIGMATEK GMBH & CO KG
ERRVAL (643)	The set encoder type is not permitted for at least one safety function. Possible cause(s): • invalid encoder setting • wrong safety function	index of axis (starting at 0)	index and subindex of the affected function		Change safety function or encoder
ERRVAL (644)	There are different results of the executed safety function in controller 1 and controller 2. Possible cause(s): • firmware error				Contact SIGMATEK GMBH & CO KG
ERRVAL (645) - ERRVAL (767)	Not used				
ERRVAL (768)	The self-test of the hardware watchdog shutdown path has failed. Possible cause(s): • firmware error • hardware error				Contact SIGMATEK GMBH & CO KG

ERRVAL (769)	The target and readback comparison of the hardware watchdog failed. Possible cause(s): • firmware error • hardware error				Contact SIGMATEK GMBH & CO KG
ERRVAL (670)	There are different readback comparisons of the hardware watchdog between controller 1 and controller 2. Possible cause(s): • firmware error • hardware error				Contact SIGMATEK GMBH & CO KG
ERRVAL (771) - ERRVAL (783)	Not used				
ERRVAL (784)	The self-test of the input shutdown path has failed. Possible cause(s): • firmware error • hardware error	index of the input (start at 0)			Contact SIGMATEK GMBH & CO KG
ERRVAL (785)	A cross-circuit was detected at the input in the Pre-Operational Mode. Possible cause(s): • firmware error • hardware error • wrong wiring	index of the output for the cross-connection (start at 0)	input status (bit 0 is input 1)	bit pattern for clock inputs which are to be 0	Contact SIGMATEK GMBH & CO KG

ERRVAL (786)	A cross-circuit was detected at the input in the Operational Mode. Possible cause(s): • firmware error • hardware error • wrong wiring	index of the output for the cross-connection (start at 0)	bit 19-16: input status before the clock test bit 11-8: input status during the test bit 3-0 input status after the test (bit 0 ist input 1)	bit pattern for clock inputs, which must be 0 during the test	Contact SIGMATEK GMBH & CO KG
ERRVAL (787)	There are different input values between controller 1 and controller 2. Possible cause(s): • firmware error • hardware error	index of the input (start at 0)	readback value of the controller (bit 0 is input 1)	readback value of the other controller (bit 0 is input 1)	Contact SIGMATEK GMBH & CO KG
ERRVAL (788)	There are differences of input pairs (two-channel mapping). Possible cause(s): • wrong configuration • wrong wiring • firmware error • hardware error				Contact SIGMATEK GMBH & CO KG
ERRVAL (789)	There is no stable combination of inputs within the maximum allowed time. Possible cause(s): • wrong configuration • wrong wiring • firmware error • hardware error	index of the input pair (start at 0)	status of the input pair (bit 0 is input 1)		Contact SIGMATEK GMBH & CO KG

ERRVAL (790) - ERRVAL (799)	Not used				
ERRVAL (800)	The self-test of the output shut-down path has failed. Possible cause(s): • wrong wiring • firmware error • hardware error	index of the output (start at 0)	readback value of controller 1 (bit 0 is output 1)	readback value of controller 2 (bit 0 is output 1)	Contact SIGMATEK GMBH & CO KG
ERRVAL (801)	The target and readback compari-son of the output failed. Possible cause(s): • wrong wiring • firmware error • hardware error	target value of out-put status (bit 0 is output 1)	readback value of the output status		Contact SIGMATEK GMBH & CO KG
ERRVAL (802)	There are different output values between controller 1 and controller 2. Possible cause(s): • firmware error • hardware error				Contact SIGMATEK GMBH & CO KG
ERRVAL (803) - ERRVAL (815)	Not used				
ERRVAL (816)	The STO self-test has failed (Gate Driver PWM). Possible cause(s): • firmware error • hardware error	index of axis (start-ing at 0)	number of read PWM cycles	target value of PWM cycles	Contact SIGMATEK GMBH & CO KG

ERRVAL (817)	The target and readback comparison of the Gate Driver PWM has failed. Possible cause(s): • firmware error • hardware error	index of axis (starting at 0)	number of cycles	Byte 0: current STO status Byte 1: target STO status	Contact SIGMATEK GMBH & CO KG
ERRVAL (818)	Different gate driver PWM cycles were detected between controller 1 and controller 2. Possible cause(s): • firmware error • hardware error	number of cycles controller 1	number of cycles controller 2		Contact SIGMATEK GMBH & CO KG
ERRVAL (819) - ERRVAL (831)	Not used				
ERRVAL (832)	The self-test of the brake control function shutdown path has failed. Possible cause(s): • firmware error • hardware error	index of axis (starting at 0)			Contact SIGMATEK GMBH & CO KG
ERRVAL (833)	The target and readback comparison of the brake control function has failed. Possible cause(s): • firmware error • hardware error	index of axis (starting at 0)	readback value of the SBC	Byte 0: SBC status in the last cycle Byte 1: target value of SBC status	Contact SIGMATEK GMBH & CO KG
ERRVAL (834)	There are different SBC values between controller 1 and controller 2. Possible cause(s): • firmware error • hardware error	index of axis (starting at 0)	Byte 0: SBC status in controller 2 Byte 1: SBC status in controller 1	Byte 0: SBC status in the last cycle Byte 1: target value of SBC status	Contact SIGMATEK GMBH & CO KG

ERRVAL (835) - ERRVAL (1024)	Not used				
ERRVAL (1025)	The set encoder is not a SIL encoder. Possible cause(s): • wrong encoder • wrong configuration • wrong motor cable	index of axis (starting at 0)			Check encoder, configuration and cable
ERRVAL (1026) - ERRVAL (1027)	Not used				
ERRVAL (1028)	The set encoder was not found. Possible cause(s): • no encoder connected • wrong encoder • wrong configuration • wrong motor cable	index of axis (starting at 0)			Check encoder, configuration and cable
ERRVAL (1029)	Not used				
ERRVAL (1030)	Incorrect or implausible data were detected at the encoder. Possible cause(s): • wrong encoder • defective encoder • wrong configuration • wrong motor cable	index of axis (starting at 0)			Check encoder, configuration and cable
ERRVAL (1031) - ERRVAL (1032)	Not used				

ERRVAL (1033)	The set encoder resolution does not match the resolution at the encoder. Possible cause(s): • wrong encoder • wrong configuration • wrong motor cable	index of axis (starting at 0)	Bit 31-16: set resolution Bit 15-0: encoder resolution	Bit 31-16: set rotations Bit 15-0: encoder rotations	Check encoder and configuration
ERRVAL (1034) - ERRVAL (1039)	Not used				
ERRVAL (1040)	The stored serial number does not match the serial number of the encoder. Possible cause(s): • Exchanging the encoder	index of axis (starting at 0)	serial number of the encoder (last 4 characters)	stored serial number (last 4 characters)	Revalidate encoder
ERRVAL (1040) - ERRVAL (1283)	Not used				
ERRVAL (1284)	Communication error regarding the encoder. Possible cause(s): • wrong encoder • defective encoder • wrong configuration • wrong motor cable	index of axis (starting at 0)			Contact SIGMATEK GMBH & CO KG
ERRVAL (1285) - ERRVAL (1535)	Not used				

ERRVAL (1536)	An undervoltage/overvoltage of the Hiperface DSL supply was detected. Possible cause(s): • defective hardware • defective encoder	index of axis (starting at 0)			Contact SIGMATEK GMBH & CO KG
ERRVAL (1537)	The encoder ID does not match the expected value. Possible cause(s): • exchanging the encoder	index of axis (starting at 0)	stored ID	detected ID	Revalidate encoder

Documentation Changes

Change date	Affected page(s)	Chapter	Note	Version
28.04.2009	All		Base version created	0.1
11.05.2010	All		Edited base version	1.0
17.08.2010	63, 64		Drawing and text corrected	1.1
23.08.2011	47		Password assignment	1.2
04.10.2011	38		Changed graphic	1.3
14.03.2012	46 47		Added Example of contact expansion Added Two-channel output	1.4
23.01.2013	12 13 14 18 20 21 31 36 48-52 55 58 60 62 66 71 72 73 74 75		Added SCP010, SDI100, STO040 and SRO020 Added SCP010, SDI100, STO040 and SRO020 Added S-DIAS-Safety System Requirements General Topology chapter: extended description Added S-DIAS Safety Modules Extended chapter Communication in the Safety System Added Error codes 1222 and 28800 seconds Chapter Mounting a Safety Module: extended description Added chapters Example 5: Optional Modules (from CSCP012) and Example 6: Interfaces (from CSCP012) Chapter Creating the Configuration: extended description Added error messages 1088 and 1087 Error messages 1086, 1087 and 1009 added Maximum Transmission Time: Description expanded Error codes 1102 and 1103 added Error code 1009 added	1.5

	76 77 78 88 89 91 93 95 96 97 99 103 109		Chapter, Calculating the Monitor Settings (starting from CSCP012): description expanded. Reaction time calculation added (formula) Reaction time calculation added (formula) Reaction time calculation added (formula) Reaction time calculation added (formula) Tbus added to the table Fixed Time Parameters that Affect the Reaction Time: table expanded Chapter, Safe Output Errors: Error code 1137 added Chapter, Outputs Cannot be Deactivated: Error codes 1143 and 1144 added Identifiers 5 to 10 added Error code 1009 added Chapter, Using Optional Modules (starting with CSCP012) added Chapter, Using Interface Variables (starting with CSCP012) and Master and Slave Mechanism with the SCP010 Module added Chapter, Using the SCP010 Module in Stand-alone Mode added Chapter, Requirements: Description expanded ERRVAL(9): Description expanded ERRVAL(73) added	
22.03.2013	Complete documentation	1.1.2 Symbols used 1.1.5. Residual risks 1.1.6. Special Safety Guidelines 1.3. Guidelines and Norms 1.4. Life Span and Operating Time 2.2. S-DIAS Safety System Structure 2.3.4. Handheld Panel	edited edited edited edited edited added edited	1.6

			General editing – S-DIAS System added All identifiers deleted.	
24.04.2013		7.1 Using Optional Modules (starting with CSCP 012)	" Starting with Firmware V245 ..." note added	1.7
13.01.2014	10 16 22 24 109		Expanded table with S-DIAS modules Expanded documentation list Added SCP011 in the table Added last chapter with SCP 011 Added Certificate S-DIAS I/O System with internal Bus	1.9
20.01.2014	All 16 17 18 19 24 26 55 68 97 98 100 102 103 104 148 159		Added revisions 1-3 Added chapter Using Modules of Revision 1, Revision 2 and Revision 3 Added chapter Using Modules of Revision 1, Revision 2 and Revision 3 Added SSI 021 Expanded chapter 1.7 System Requirements Added SDI101, STO081, SRO021 and SSI021 in table Added S-DIAS Safety modules Added chapter 3.2.1.5 Example 5: Optional Modules (starting with Revision 2) Added chapter 4.4.2.2 Maximum Transmission Time (Output as Input) Added Indentifier 11 to 13 Added Indentifier 14 to 18 Added chapter 6.3.4 Exchanging Safe Input or Output modules with the SCP 010 and the SCP 011 Safety Modules Added last notice concerning SF_Optional_PwdII Added chapter 7.2 Safety Measures and Guidelines Added last notice concerning Master system Added ERRVAL(1040-1048) Changed ERRVAL(1148), added ERRVAL(1149), ERRVAL(1156-1171), ERRVAL(1172-1196) and ERRVAL(1197)	2.0

25.04.2014	44		Wiring samples S-DIAS added	2.1
30.04.2014	17 23 25 27		Added SDM 081 mixed module Added SDM 081 mixed module Added SDM 081 mixed module Added SDM 081 mixed module	2.2
23.05.2014	107		Added chapter Compatibility of S-DIAS Safety Components	2.3
12.01.2015	107		Changed S-DIAS – Safety – IO – Bus graphic	2.4
25.02.2015	47		Added S-DIAS Hardware configuration	2.4
30.03.2015	73 76		Changed Fig. 46 Added chapter Monitoring of contact-based sensors using the Emergency stop example	2.5
27.05.2015	9 12 18 19 20 22 23 25 27 28 71 83 89, 90 107 112 113-116 117 119 171		FSoE in table and footnote added Table with new S-DIAS modules Module of revision 4 added and description extended SCP 111 added Since revision 4: added Last sentence with SCP 111 FSoE safety protocol extended Last paragraph with SCP 111 FSoE safety protocol extended SCP111 in table added SCP 111 in text added SCP 111 in text added (not Revision 4) at Maximum Transmission added Sentence about revision 4 in first paragraph added Chapter Determination of Reaction Time with FSoE Communication added SCP 111 extended SCP 111 extended Chapter Communication via FSoE (Revision 4) added New graphics with SCP 111 SCP 111 extended	2.6

			Description of ERRVAL(1148) added	
23.06.2015	Page 9 19 23 24 25 48 54 60 86 108 119		Changed 2nd bullet point at first notice (operating instruction instead of technical documentation) Updated Fig. 2 Architecture of decentralized control Updated Fig. 5 Architecture of decentralized control Added notice that the Safety CPU must fit at the bus master Updated Fig. 6 Example of a Safety system Updated Fig. 19 S-DIAS Hardware configuration Updated Fig. 24 C-DIAS Hardware configuration of example 3 Added „...positioned on the bus master...“at the description of Example 6: Interfaces (starting from Revision 2) „bus system“ replaced by „ communication system“ Added notice that the Safety CPUs must be positioned at the bus master Updated graphic	2.7
02.10.2015	79		Using Unsafe Release Signals picture changed	2.8
23.11.2015			Error list completely updated	2.8
29.03.2016	105 117-125 172 187 208		Added Identifier 19 and 20 Added chapter 7.7 Creating a FSoE connection via an IP address Changed ERRVAL(1004) Changed ERRVAL(1068) Changed ERRVAL(1233)	2.9
27.06.2016	 102		CAN -> Safety Interface Footnote added	3.0
01.09.2016	114		No standalone with SSI	3.1
25.10.2016			Error list extended	3.2
22.11.2016			EN 61508 -> EN 62061	3.2
28.03.2017	135		Error codes extended (1047-1050, 1156, 1162-1165)	3.3
17.10.2017	All		General update	3.4

23.05.2018	81	4.4.3.5 OSSD Signals on SIGMATEK Safety PLC Inputs	Chapter added	3.5
30.05.2018		11 Appendix A: Troubleshooting	expanded	3.6
18.06.2018		2.5.1 Configuration Characteristics 4.2.2 System Configuration 6.2 Changing the Configuration 6.3 Exchanging Modules 7.1 Using Optional Modules	Validation notes added	3.7
25.07.2018	34 140	2.3.4 Hand Control Units 7.8 Compatibility of S-DIAS Safety Modules	List of units extended Graphics added Table updated	3.8
18.09.2018	24	2.2 S-DIAS Safety System Architecture	Text example corrected	3.8
02.04.2019			TÜV adjustments & HGW 1033-32 added	3.8
23.10.2019	141ff	11 Appendix A: Troubleshooting	Error codes updated	3.8
25.05.2020	14 19 21 27 29 32ff 36 92 136 185 203	1.1.3 General Safety Guidelines 1.5 Service Life, Operating Time and Switching Cycle Times 1.7 Documentation 2.3.1 General Topology 2.3.2 Safety Modules 2.3.5 CAN Interface 2.5.4 Reaction Time and Turn-off Times 4.8 Reaction Time 7.8 Compatibility of S-DIAS-Safety Modules 11 Appendix A: Troubleshooting	Supplemented by support SRO022. Supplemented by documentation of the use of the CAN bus.	3.9
01.07.2020	14, 27		Dc 101 and DC 102 added	4.0
01.12.2020	118	7.1 Using Optional Modules (starting with Revision 2)	Text inserted before the Hazard warnings	4.0
07.03.2022			New products SCP 111-S, SCP 211 and SAI 041 added	4.1
18.08.2023	142ff	8 MDD 2000 (DIAS DRIVE 2000)	Chapters added	5.0

	266ff	12 Appendix B: Troubleshooting MDD2000		
09.08.2024	146	8.2.3 Encoder	Chapter updated	5.1
	147	8.2.4 Safety Functions	SBT removed from table	
	153	8.2.9 Referencing the Absolute Position	Note-box extended	
	158	8.2.15 Brake Test	Note-box added Text reviewed	
18.10.2024	15	1.1.3 General Safety Guidelines	DC 064, DC 104, ST 152 added	5.2
	29	2.3.1 General Topology	DC 064, DC 104, ST 152 added	
01.08.2025	25	1.8 System Requirements	Use of EtherCAT bus	5.3
	145	7.9 Parameter Lists	Chapter added	
	178	9 EtherCAT for Safety Modules	Chapter added	
	249	13 Appendix A: Troubleshooting	ERRVAL 1061-1065 added ERRVAL 10013-10036	
01.10.2025	178	9.1.1 Reading in Safety EtherCAT files (ESI files)	Text and Image added	5.4
	273	13 Appendix A: Troubleshooting	error fixed	
22.01.2026	251	13 Appendix A: Troubleshooting	ERRVAL 1068 changed	5.5
03.02.2026	47	2.6.4 OpTemp – Time limited Operational Mode	Chapter updated	5.6
	143	7.8 Compatibility of S-DIAS Safety Modules	Chapter updated, Table updated, Table added	